Nov 21, 2023 - 9:56am
J:\2022\22083 - Team Properties The Maine Woods Subdivision - Bangor - Team Properties\J. Drawings\CIVIL\2023 permitting\111623 22083 base.dwg

EX

SHEET OF 17

DRAWINGS NOT SEALED ARE FOR PLANNING PURPOSES ONLY AND ARE NOT INTENDED FOR PERMITTING, BIDDING OR CONSTRUCTION

STATE OF MAINE — PAUL SCOTT BRALEY — No. 6227 — LICENSED PROFESSIONAL ENGINEER — 11/20/23

Plymouth Engineering, Inc.
P.O. Box 46 30 Lower Detroit Road
Plymouth, Maine 04969
Tel: (207) 257-2071 Fax: (207) 257-2130
info@plymouthengineering.com
www.plymouthengineering.com

DESIGNED:	SEB	PROJECT NO.	22083
DRAWN:	AAK	DRAWING NO.	22083 BASE.DWG
CHECKED:	SEB	FIELDBOOK:	N/A
APPROVED:	SEB	SCALE:	AS SHOWN
PLAN DATE:	11/7/23	DATE ISSUED:	11/7/23

CLIENT & OWNER:
TEAM PROPERTIES
1411 ESSEX ST.
BANGOR, ME 04401

PROJECT NAME:
THE MAINE WOODS SUBDIVISION
LANCASTER AVE., BANGOR, PENOBSCOT COUNTY MAINE

SHEET NAME:
PRE-DEVELOPMENT CONDITIONS

REVISIONS

NO.	DATE	DESCRIPTION	DRAWN	APPD.
1	11/8/23	RESPONSE TO CITY COMMENTS	SEB	SEB
2	11/16/23	RESPONSE TO CITY COMMENTS	SEB	SEB

PLANNING BOARD APPROVAL BLOCK

THIS IS TO CERTIFY THAT AFTER REVIEWING THE SUBDIVISION SHOWN BY THIS PLAN AND CONSIDERING EACH OF THE CRITERIA SET FORTH IN 30-A M.R.S.A. SECTION 4404 (AS AMENDED) THE UNDERSIGNED HAVING MADE FINDINGS OF FACT ESTABLISHING THAT THE PROPOSED SUBDIVISION MEETS ALL OF THE CRITERIA SET FORTH THEREON AND THEREFORE THE SUBDIVISION IS APPROVED.

_____ DATE

_____ CHAIRPERSON

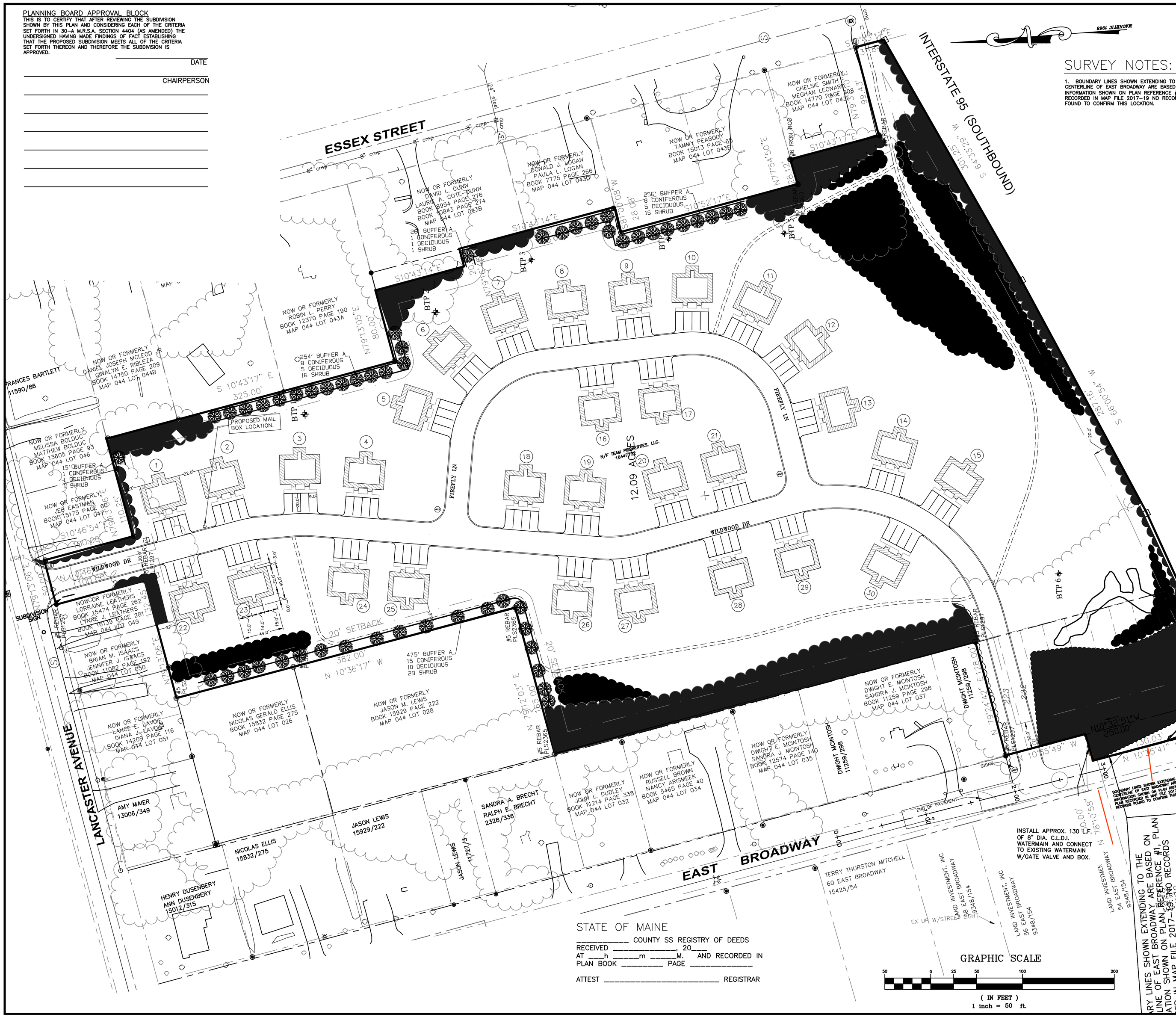

SURVEY NOTES:

1. BOUNDARY LINES SHOWN EXTENDING TO THE CENTERLINE OF EAST BROADWAY ARE BASED ON INFORMATION SHOWN ON PLAN REFERENCE #1. PLAN RECORDED IN MAP FILE 2017-19 NO RECORDS FOUND TO CONFIRM THIS LOCATION.

GENERAL NOTES:

1. THE APPLICANT AND RECORD OWNER IS TEAM PROPERTIES, LLC, WHOSE ADDRESS IS 1411 ESSEX STREET, BANGOR, ME 04401.
2. THE PROPERTY IS LOCATED ON LANCASTER AVE & ESSEX ST., BANGOR, MAINE AND IS DESCRIBED AS LOT 043 ON THE CITY OF BANGOR ASSESSOR'S TAX MAP 044, LOTS 039,040,041, AND 043. THE BOUNDARY SURVEY INCLUDES ALL FOUR LOTS.
3. THIS IS A RESUBMISSION OF A PREVIOUSLY APPROVED SITE PLAN BY THE BANGOR PLANNING BOARD IN NOVEMBER, 2006 WITH 2017 REVISIONS. THE PURPOSE OF THIS PLAN IS TO PERMIT THE CREATION OF THIRTY (30) DUPLEXES (WITH ASSOCIATED ROADWAY, STORM WATER MANAGEMENT AND UTILITY IMPROVEMENTS).
4. THE SITE IS LOCATED WITHIN THE LOW DENSITY RESIDENTIAL (LDR) ZONE/DISTRICT.
5. TOTAL AREA OF SUBDIVISION: . . . . . 526.640 S.F.+/-, OR 12.09 AC.+/-
6. SPACE AND BULK INFORMATION FOR LOW DENSITY RESIDENTIAL:

	REQUIRED	PROVIDED
MIN. LOT AREA:	8,000 sqft	12.09 ACRES
MIN. LOT WIDTH:	100'	50' LANCASTER 219.98' E.BROADWAY/ALDEN
MIN. FRONT SETBACK:	30'	122'
SIDE SETBACK:	20'	22'
MIN. REAR SETBACK:	25'	
MAX. HEIGHT:	35'	26'4"
IMPERV. SURFACE RATIO	0.3	0.246
OPEN SPACE REQUIRED	35%	76.3%
MAX DWELLING UNIT/AC	5	4.96
MAX DWELLING UNIT/BLDG	6	2
MAX LOT COVERAGE	25%	8.8%
MIN BUFFER YARD TYPE	A	A SUBTYPE 1

TOTAL PROPOSED IMPERVIOUS AREA: 2.87 ACRES
OPEN SPACE REQUIRED: 35% OF LOT (4.23 ACRES REQ'D, & 9.22 PROPOSED)
OPEN SPACE PERCENTAGE PROVIDED: 76.3%
PARKING: 1 1/2 SPACES PER UNIT REQUIRED X 60 = 90 SPACES
120 SPACES PROVIDED

7. TOPOGRAPHY INFORMATION TAKEN FROM PLANS PROVIDED BY A. E. HODSDON CONSULTING ENGINEERS, 10 COMMON ST., WATERVILLE, ME.
8. BOUNDARY INFORMATION PROVIDED BY ALAN PERRY SURVEYOR, ETNA MAINE
9. REVISED BUILDING LAYOUT AND GRADING PROVIDED BY PLYMOUTH ENGINEERING, INC., WHOSE ADDRESS IS 8 MAIN ST., STE C, NEWPORT, MAINE 04953.
10. THIS PROJECT IS PROPOSING A PRIVATE ROADWAY AND AS SUCH, PUBLIC SERVICES SUCH AS SNOW PLOWING AND TRASH PICK UP/REMOVAL ARE THE RESPONSIBILITY OF THE OWNER/APPLICANT AND/OR THE HOMEOWNERS' ASSOCIATION AND WILL NOT BE PROVIDED BY THE CITY OF BANGOR. STORM WATER MAINTENANCE, ANNUAL INSPECTION AND REPORTING IS RESPONSIBILITY OF THE HOMEOWNERS' ASSOCIATION.
11. OVERHEAD UTILITY POLE LOCATIONS TO BE ESTABLISHED BY VERSANT POWER. ALL ELECTRICAL AND COMMUNICATIONS LINES WILL BE OVERHEAD. LINES ARE NOT SHOWN FOR CLARITY.
12. FEDERAL, STATE, AND MUNICIPAL LAWS AND REGULATIONS REQUIRE ANY ONE PERFORMING ANY SORT OF EXCAVATION, INCLUDING DIGGING, BORING, BACKFILLING, OR ROUGH GRADING TO NOTIFY "DIG-SAFE" (1-800-344-7233) AND ANY APPLICABLE UTILITY THAT IS NOT A PARTICIPANT IN "DIG-SATE", AT LEAST 72 HOURS PRIOR TO COMMENCING WORK.
13. PROJECT WAS PREVIOUSLY DESIGNED AND PERMITTED BY A.E. HODSDON ENGINEERS, NO CHANGE OTHER THAN SEWER AND WATER SERVICE LOCATIONS FOR THE NEW BUILDING LAYOUT HAVE BEEN MADE TO THE APPROVED UTILITY PLANS.
14. THE INTENT OF THE WALKING TRAIL IS TO TERMINATE AT THE ESSEX ST. SIDEWALK.
15. FINAL LOCATION OF UTILITIES TO MEET APPLICABLE UTILITY STANDARDS.
16. THE BUFFER YARD PLANTINGS ARE INTENDED TO BE MET WITH EXISTING VEGETATION UNLESS SHOWN OTHERWISE. THE INTENT IS TO MEET THE CITY OF BANGOR TYPE A SUBTYPE 1 BUFFER STANDARD TO INCLUDE 2 DECIDUOUS TREES, 3 CONIFEROUS TREES AND 6 SHRUBS PER 100' OR PORTION THEREOF.
17. ALL TREES OF 6" DIAMETER AT 12" ABOVE GROUND OR 15' IN HEIGHT THAT ARE WITHIN THE TREE SAVE AREAS WILL BE PRESERVED. ANY OUTSIDE THAT AREA THAT ARE WITHIN GRADING, ROADWAY, BUILDING, YARD, OR UTILITY AREAS WILL BE CLEARED.
18. EACH RESIDENCE WILL HAVE INIDIVIDUAL TRASH RECEPITCALS.
19. ALL AREAS OUTSIDE OF THE BUILDING, ROADS, AND PARKING SPACES ARE PART OF THE OPEN SPACE.
20. ON-SITE WETLAND DELINEATION WAS PERFORMED IN SEPTEMBER OF 2022 BY MOYSE ENVIRONMENTAL SERVICES, OF BANGOR, MAINE.

LEGEND:

- ANGLE POINT
- UTILITY POLE
- HYDRANT
- MANHOLE
- TREE
- GATE VALVE
- TBM
- CATCH BASIN
- TEST PIT
- TEST BORING
- EXIST. CONTOUR
- WATER SHUT OFF
- BUILDING
- CULVERT
- ASPHALT ROAD
- GRAVEL ROAD
- EXIST. WATER
- EXIST. SEWER
- UNDERGROUND TEL.
- UNDERGROUND ELEC.
- STORM DRAIN
- FENCE
- PROPOSED CONTOUR
- WETLAND
- EXISTING TREELINE
- NEW TREELINE OR UNDISTURBED TREELINE TO REMAIN
- PROPOSED WALKING PATH
- PROPOSED RIP-RAP
- ANTICIPATED PLANTINGS TO MEET 10' TYPE A SUBTYPE 1 BUFFER REQUIREMENTS SEE NOTE 16.

STATE OF MAINE
_____ COUNTY SS REGISTRY OF DEEDS
RECEIVED _____, 20____
AT ___h _____m _____M. AND RECORDED IN
PLAN BOOK _____ PAGE _____
ATTEST _____ REGISTRAR

GRAPHIC SCALE
50 0 25 50 100 200
(IN FEET)
1 inch = 50 ft.

STATE OF MAINE ALAN R. PERRY 2194 PROFESSIONAL LAND SURVEYOR

REVISIONS

NO.	DATE	DESCRIPTION	DRAWN	APPD.
1	11/8/23	RESPONSE TO CITY COMMENTS	SEB	SEB
2	11/16/23	RESPONSE TO CITY COMMENTS	SEB	SEB

PROJECT NAME: THE MAINE WOODS SUBDIVISION
LANCASTER AVE., BANGOR, PENOBSCOT COUNTY MAINE
SHEET NAME: SUBDIVISION PLAN

PROJECT NO. 22083
DRAWING NO. 22083 BASE.DWG
FIELDBOOK: N/A
SCALE: AS SHOWN
DATE ISSUED: 11/7/23

DESIGNED: SEB
DRAWN: AAK
CHECKED: SEB
APPROVED: SEB
PLAN DATE: 11/7/23

CLIENT & OWNER:
TEAM PROPERTIES
1411 ESSEX ST.
BANGOR, ME 04401

Plymouth Engineering, Inc.
P.O. Box 46 30 Lower Detroit Road
Plymouth, Maine 04969
Tel: (207) 257-2071 Fax: (207) 257-2130
info@plymouthengineering.com
www.plymouthengineering.com

STATE OF MAINE SCOTT E. BRALEY No. 6227 LICENSED PROFESSIONAL ENGINEER
11/20/23

DRAWINGS NOT SEALED ARE FOR PLANNING PURPOSES ONLY AND ARE NOT INTENDED FOR PERMITTING, BIDDING OR CONSTRUCTION

Nov 28, 2023 - 8:54pm
J:\2022\22083 - Team Properties The Maine Woods Subdivision - Bangor - Team Properties\J. Drawings\CIVIL\2023 permitting\12823 22083 base.dwg

Nov 21, 2023 - 9:57am
J:\2022\22083 - Team Properties The Maine Woods Subdivision - Bangor - Team Properties\J. Drawings\CIVIL\2023 permitting\111623 22083 base.dwg

FOR PERMIT ONLY

DRAWINGS NOT SEALED ARE FOR PLANNING PURPOSES ONLY AND ARE NOT INTENDED FOR PERMITTING, BIDDING OR CONSTRUCTION.

SHEET 3 OF 17

C2

Plymouth Engineering, Inc.
P.O. Box 46 30 Lower Detroit Road
Plymouth, Maine 04969
Tel: (207) 257-2071 Fax: (207) 257-2130
info@plymouthengineering.com
www.plymouthengineering.com

DESIGNED:	SEB	PROJECT NO.	22083
DRAWN:	AAK	DRAWING NO.	22083 BASE.DWG
CHECKED:	SEB	FIELDBOOK:	N/A
APPROVED:	SEB	SCALE:	AS SHOWN
PLAN DATE:	11/7/23	DATE ISSUED:	11/7/23

CLIENT & OWNER:
TEAM PROPERTIES
1411 ESSEX ST.
BANGOR, ME 04401

PROJECT NAME:
THE MAINE WOODS SUBDIVISION
LANCASTER AVE., BANGOR, PENOBSCOT COUNTY MAINE

SHEET NAME:
ROAD PLAN

REVISIONS

NO.	DATE	DESCRIPTION	DRAWN	APPD.
1	11/8/23	RESPONSE TO CITY COMMENTS	SEB	SEB
2	11/16/23	RESPONSE TO CITY COMMENTS	SEB	SEB

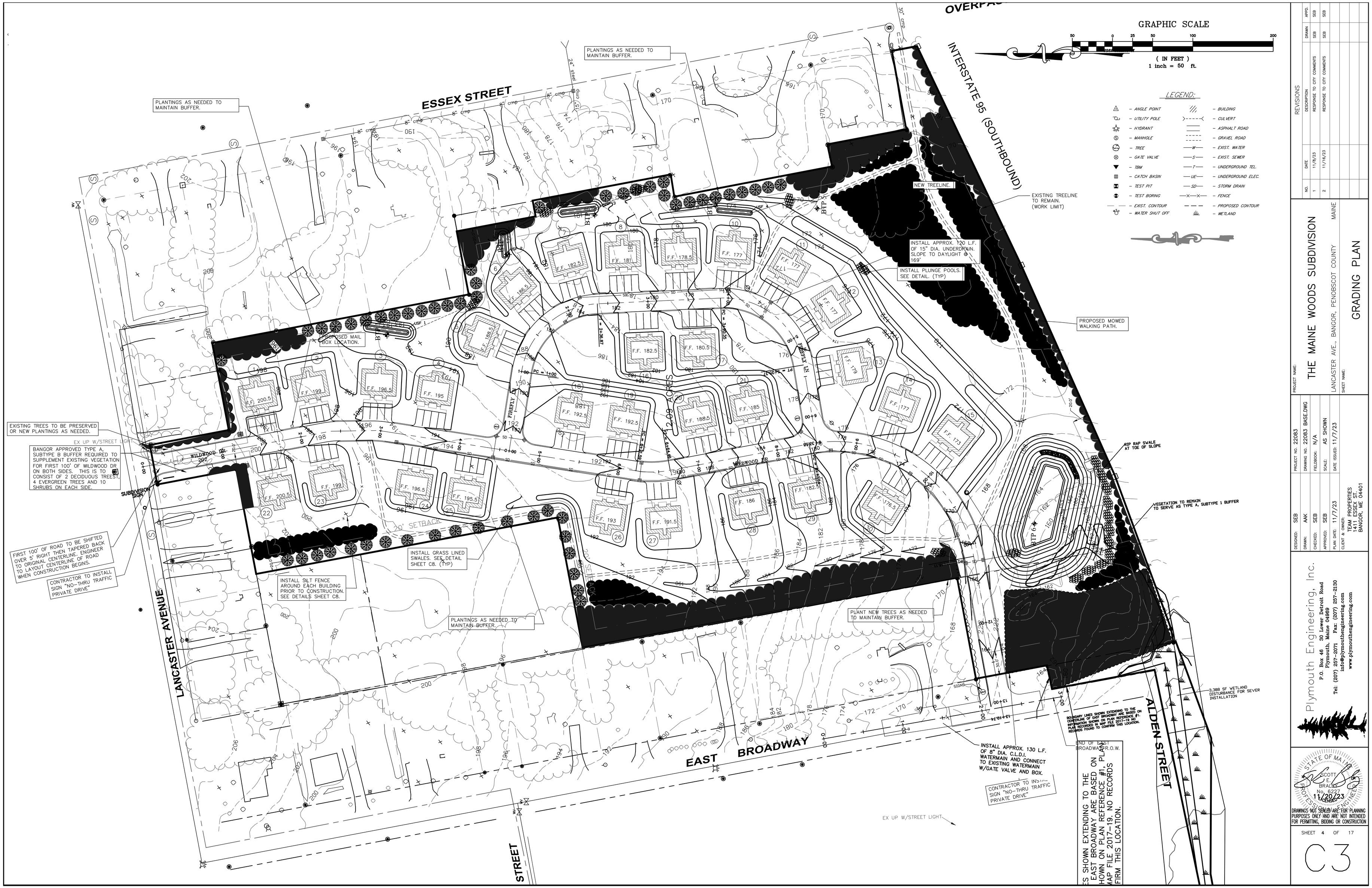

REVISIONS

NO.	DATE	DESCRIPTION	DRAWN	APPD.
1	11/8/23	RESPONSE TO CITY COMMENTS	SEB	SEB
2	11/16/23	RESPONSE TO CITY COMMENTS	SEB	SEB

PROJECT NAME: THE MAINE WOODS SUBDIVISION

LANCASTER AVE., BANGOR, PENOBSCOT COUNTY MAINE

SHEET NAME: GRADING PLAN

PROJECT NO.	22083
DRAWING NO.	22083 BASE.DWG
FIELDBOOK:	N/A
SCALE:	AS SHOWN
DATE ISSUED:	11/7/23
DESIGNED:	SEB
DRAWN:	AAK
CHECKED:	SEB
APPROVED:	SEB
PLAN DATE:	11/7/23

CLIENT & OWNER: TEAM PROPERTIES 141 ESSEX ST BANGOR, ME 04401

Plymouth Engineering, Inc.
P.O. Box 46 30 Lower Detroit Road
Plymouth, Maine 04969
Tel: (207) 257-2071 Fax: (207) 257-2130
info@plymouthengineering.com
www.plymouthengineering.com

STATE OF MAINE SCOTT E. BRAILEY No. 6227 11/20/23 LICENSED PROFESSIONAL ENGINEER

DRAWINGS NOT SEALED ARE FOR PLANNING PURPOSES ONLY AND ARE NOT INTENDED FOR PERMITTING, BIDDING OR CONSTRUCTION

SHEET 4 OF 17

C3

Nov 21, 2023 - 9:58am
J:\2022\22083 - Team Properties The Maine Woods Subdivision - Bangor - Team Properties\J. Drawings\CIVIL\2023 permitting\111623 22083 base.dwg

Plymouth Engineering, Inc.
P.O. Box 46 30 Lower Detroit Road
Plymouth, Maine 04969
Tel: (207) 257-2071 Fax: (207) 257-2130
info@plymouthengineering.com
www.plymouthengineering.com

DESIGNED:	SEB	PROJECT NO.	22083
DRAWN:	AAK	DRAWING NO.	22083 BASE.DWG
CHECKED:	SEB	FIELDBOOK:	N/A
APPROVED:	SEB	SCALE:	AS SHOWN
PLAN DATE:	11/7/23	DATE ISSUED:	11/7/23

CLIENT & OWNER:
TEAM PROPERTIES
1411 ESSEX ST.
BANGOR, ME 04401

PROJECT NAME:
THE MAINE WOODS SUBDIVISION
LANCASTER AVE., BANGOR, PENOBSCOT COUNTY MAINE

SHEET NAME:
UTILITY PLAN

REVISIONS

NO.	DATE	DESCRIPTION	DRAWN	APPD.
1	11/8/23	RESPONSE TO CITY COMMENTS	SEB	SEB
2	11/16/23	RESPONSE TO CITY COMMENTS	SEB	SEB

STATE OF MAINE
SCOTT E. BRALEY
No. 6227
LICENSED
PROFESSIONAL ENGINEER
11/20/23

DRAWINGS NOT SEALED ARE FOR PLANNING PURPOSES ONLY AND ARE NOT INTENDED FOR PERMITTING, BIDDING OR CONSTRUCTION

C4

SHEET 5 OF 17

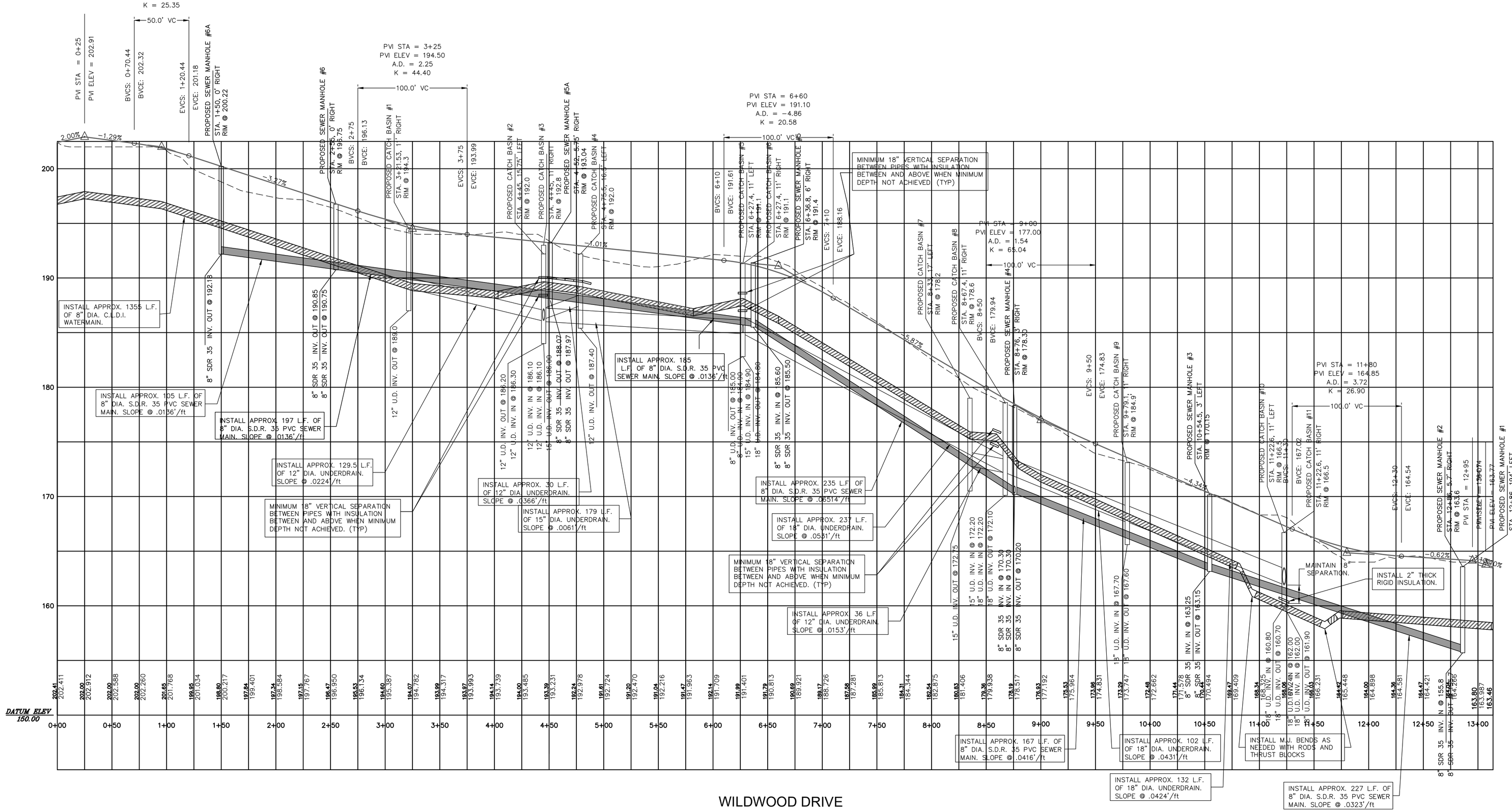

NOTE: IN ALL LOCATIONS WHERE SANITARY SEWER IS DIRECTLY OVER STORM DRAIN USE SOLID STORM DRAIN PIPE IN LIEU OF PERFORATED PIPE.

GRAPHIC SCALE

50 0 25 50 100 200

(IN FEET)
1 inch = 50 ft.

REVISIONS

NO.	DATE	DESCRIPTION	DRAWN	APPD.
1	11/8/23	RESPONSE TO CITY COMMENTS	SEB	SEB
2	11/16/23	RESPONSE TO CITY COMMENTS	SEB	SEB

PROJECT NAME:
THE MAINE WOODS SUBDIVISION
LANCASTER AVE., BANGOR, PENOBSCOT COUNTY MAINE

SHEET NAME:
WILDWOOD DR PROFILE

PROJECT NO. 22083
DRAWING NO. 22083 BASE.DWG
FIELDBOOK: N/A
SCALE: AS SHOWN
DATE ISSUED: 11/7/23

DESIGNED: SEB
DRAWN: AAK
CHECKED: SEB
APPROVED: SEB
PLAN DATE: 11/7/23
CLIENT & OWNER: TEAM PROPERTIES 1411 ESSEX ST. BANGOR, ME 04401

Plymouth Engineering, Inc.
P.O. Box 46 30 Lower Detroit Road
Plymouth, Maine 04969
Tel: (207) 257-2071 Fax: (207) 257-2130
info@plymouthengineering.com
www.plymouthengineering.com

STATE OF MAINE SCOTT E. BRADLEY No. 6277 REGISTERED PROFESSIONAL ENGINEER 11/20/23

DRAWINGS NOT SEALED ARE FOR PLANNING PURPOSES ONLY AND ARE NOT INTENDED FOR PERMITTING, BIDDING OR CONSTRUCTION

SHEET 6 OF 17

C5

Nov 21, 2023 - 9:58am
J:\2022\22083 - Team Properties The Maine Woods Subdivision - Bangor - Team Properties\J_Drawings\CIVIL\2023 permitting\11\22 22083 base.dwg

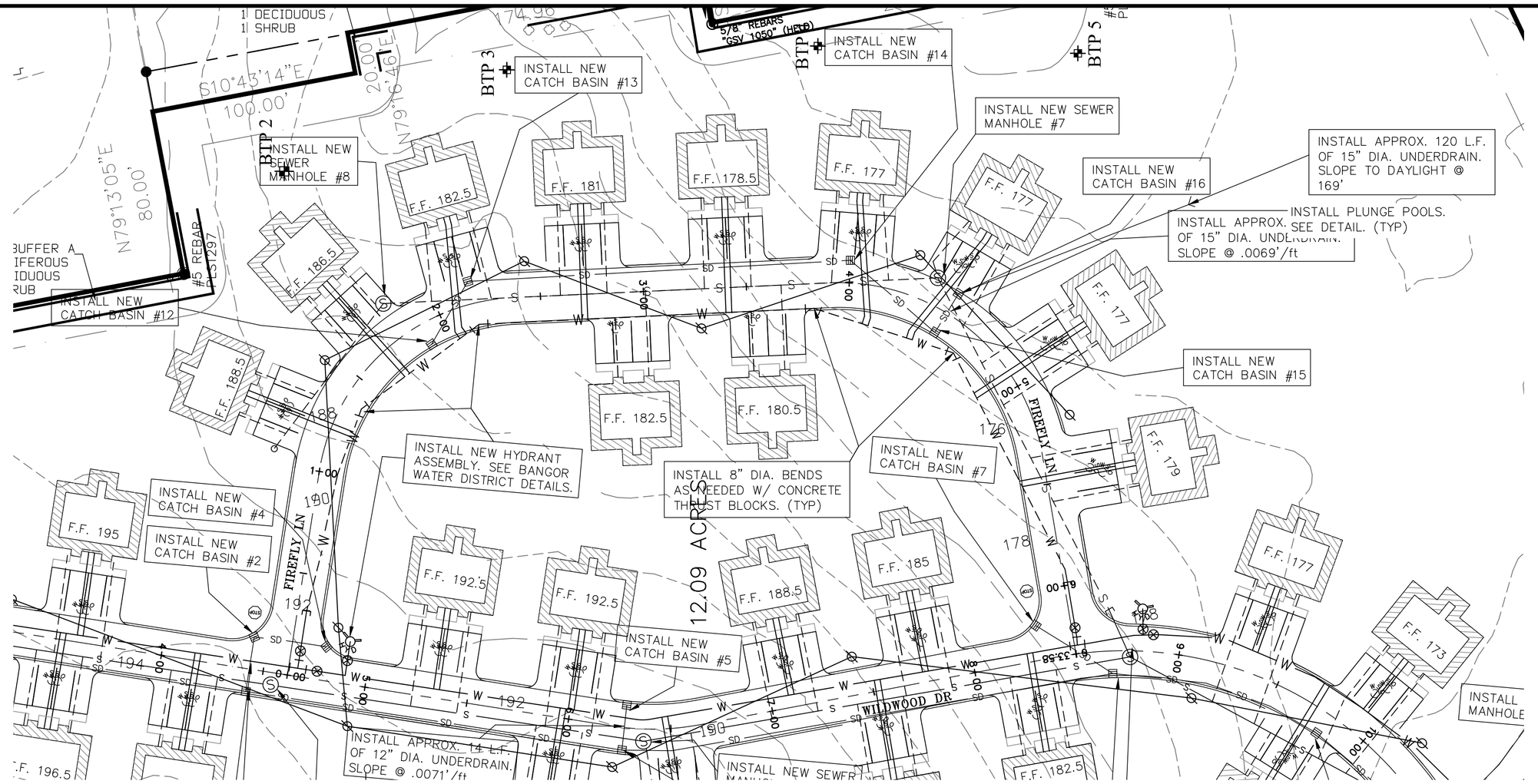

FIREFLY DRIVE

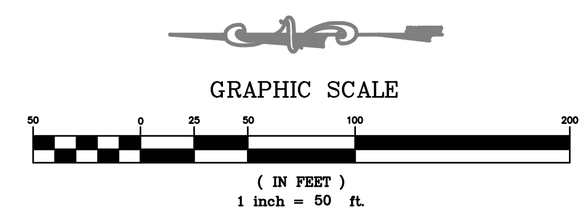

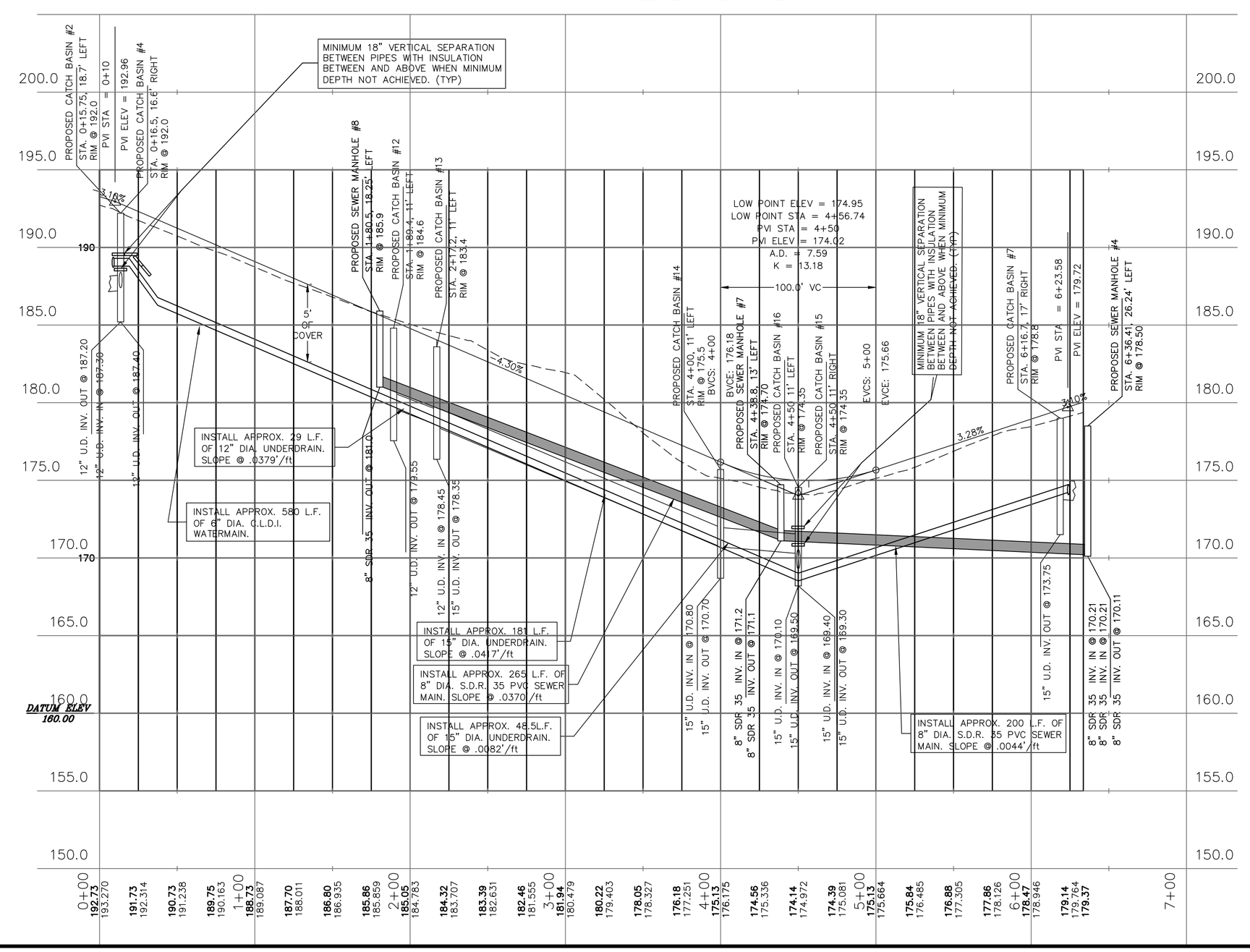

LEGEND:

- ANGLE POINT
- UTILITY POLE
- HYDRANT
- MANHOLE
- TREE
- GATE VALVE
- TBM
- CATCH BASIN
- TEST PIT
- TEST BORING
- EXIST. CONTOUR
- BUILDING
- CULVERT
- ASPHALT ROAD
- GRAVEL ROAD
- EXIST. WATER
- EXIST. SEWER
- UNDERGROUND TEL.
- UNDERGROUND ELEC.
- STORM DRAIN
- FENCE
- PROPOSED CONTOUR

THIS IS A RESUBMISSION OF A PREVIOUSLY APPROVED SITE PLAN BY THE BANGOR PLANNING BOARD IN NOVEMBER, 2006.

NOTE: IN ALL LOCATIONS WHERE SANITARY SEWER IS DIRECTLY OVER STORM DRAIN USE SOLID STORM DRAIN PIPE IN LIEU OF PERFORATED PIPE.

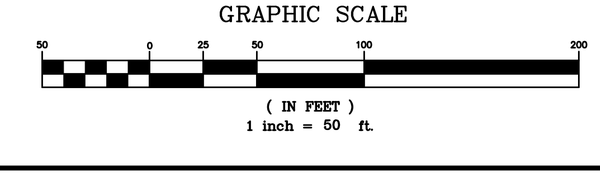

REVISIONS

NO.	DATE	DESCRIPTION	DRAWN	APPD.
1	11/8/23	RESPONSE TO CITY COMMENTS	SEB	SEB
2	11/16/23	RESPONSE TO CITY COMMENTS	SEB	SEB

PROJECT NAME:
THE MAINE WOODS SUBDIVISION
LANCASTER AVE., BANGOR, PENOBSCOT COUNTY, MAINE

SHEET NAME:
FIREFLY LN PROFILE

DESIGNED: SEB
DRAWN: AAK
CHECKED: SEB
APPROVED: SEB
PLAN DATE: 11/7/23
PROJECT NO. 22083
DRAWING NO. 22083 BASE.DWG
FIELDBOOK: N/A
SCALE: AS SHOWN
DATE ISSUED: 11/7/23

CLIENT & OWNER:
TRI-TEC PROPERTIES
1411 ESSEX ST.
BANGOR, ME 04401

Plymouth Engineering, Inc.
P.O. Box 46 30 Lower Detroit Road
Plymouth, Maine 04969
Tel: (207) 257-2071 Fax: (207) 257-2130
info@plymouthengineering.com
www.plymouthengineering.com

STATE OF MAINE
SCOTT E. BRALEY
No. 5723
LICENSED
PROFESSIONAL ENGINEER
11/20/23

DRAWINGS NOT SEALED ARE FOR PLANNING PURPOSES ONLY AND ARE NOT INTENDED FOR PERMITTING, BIDDING OR CONSTRUCTION

SHEET 7 OF 17

C6

Nov 21, 2023 - 9:58am
J:\2022\22083 - Team Properties The Maine Woods Subdivision - Bangor - Team Properties\J. Drawings\CIVIL\2023 permitting\111623 22083 base.dwg

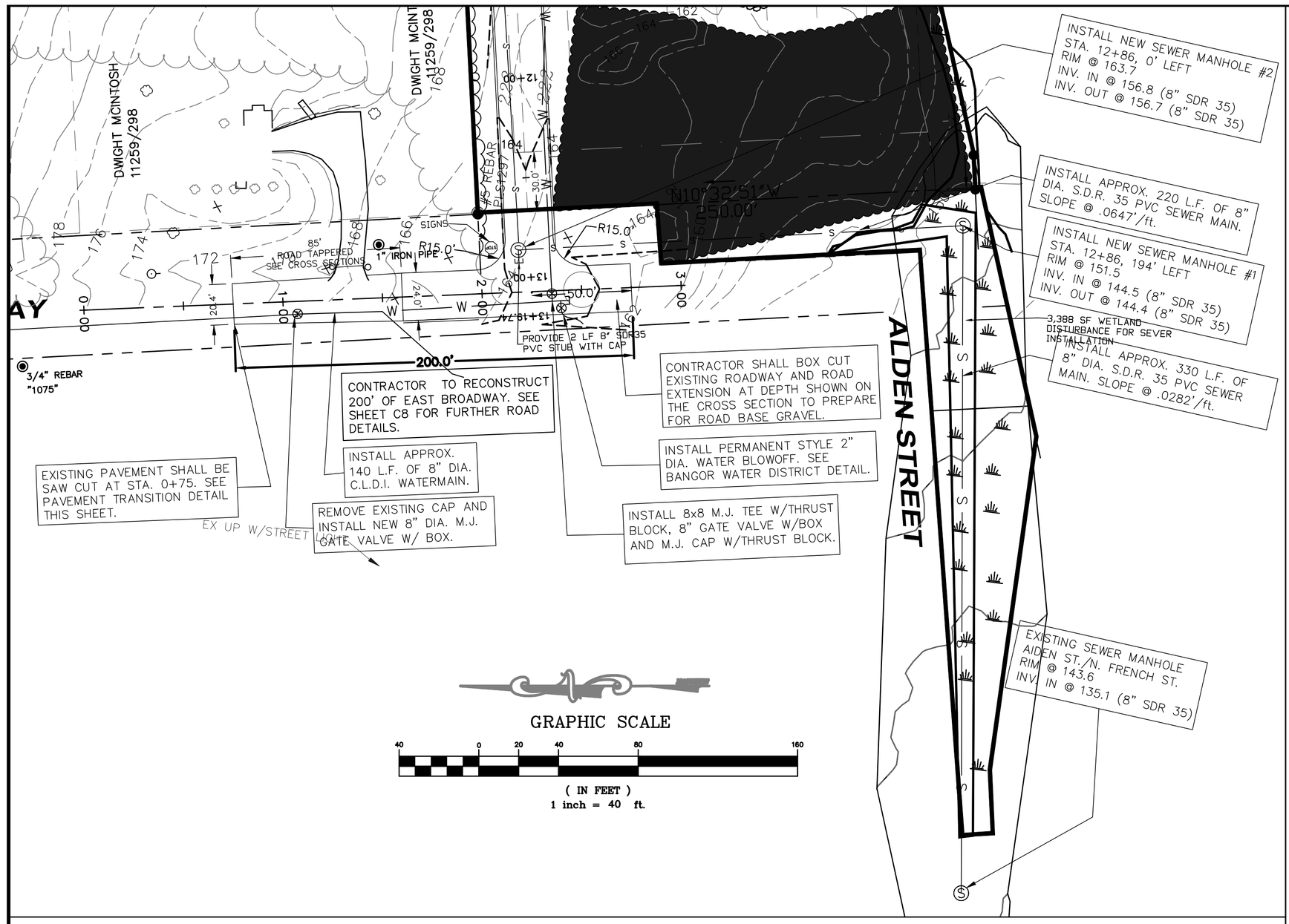

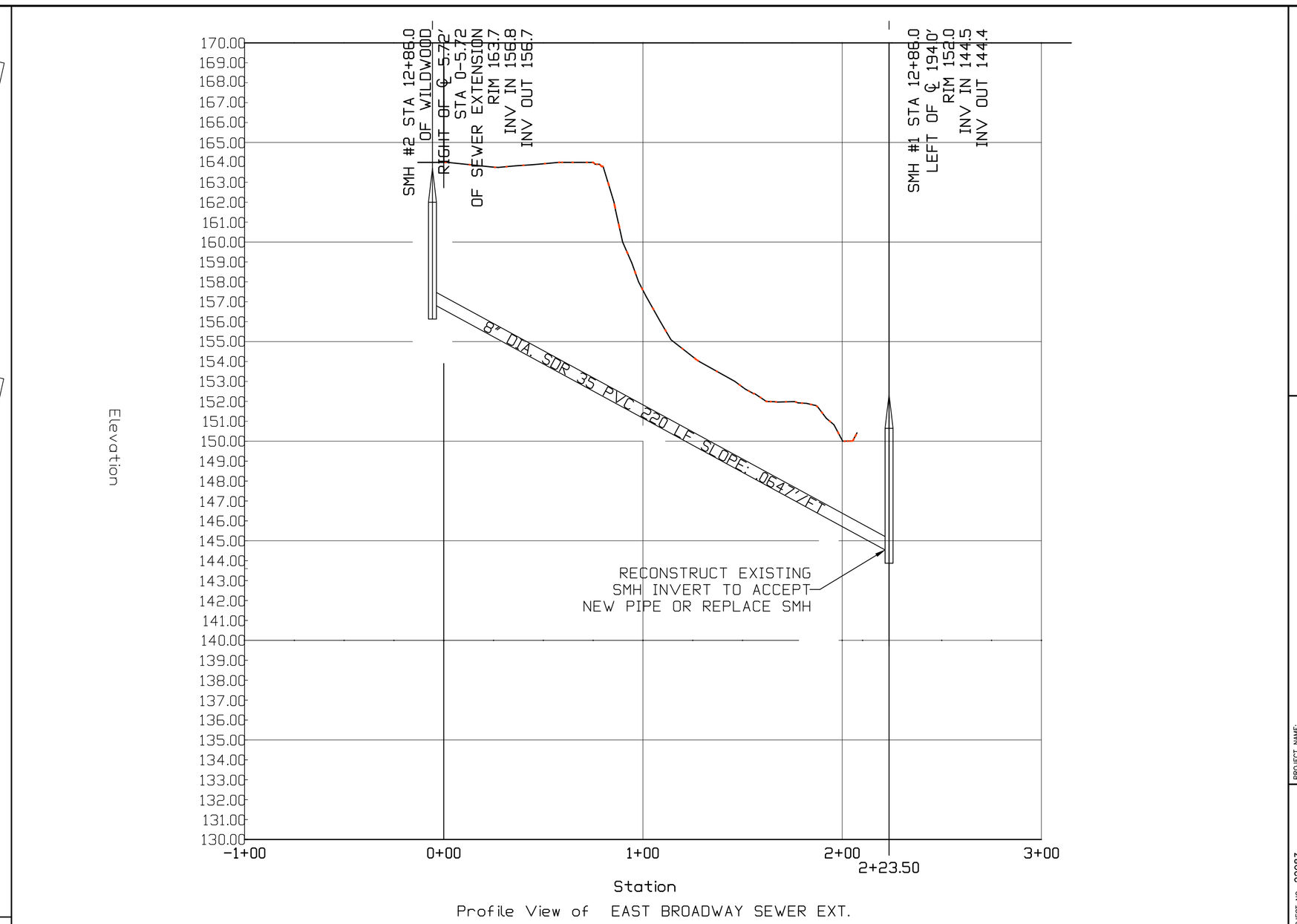

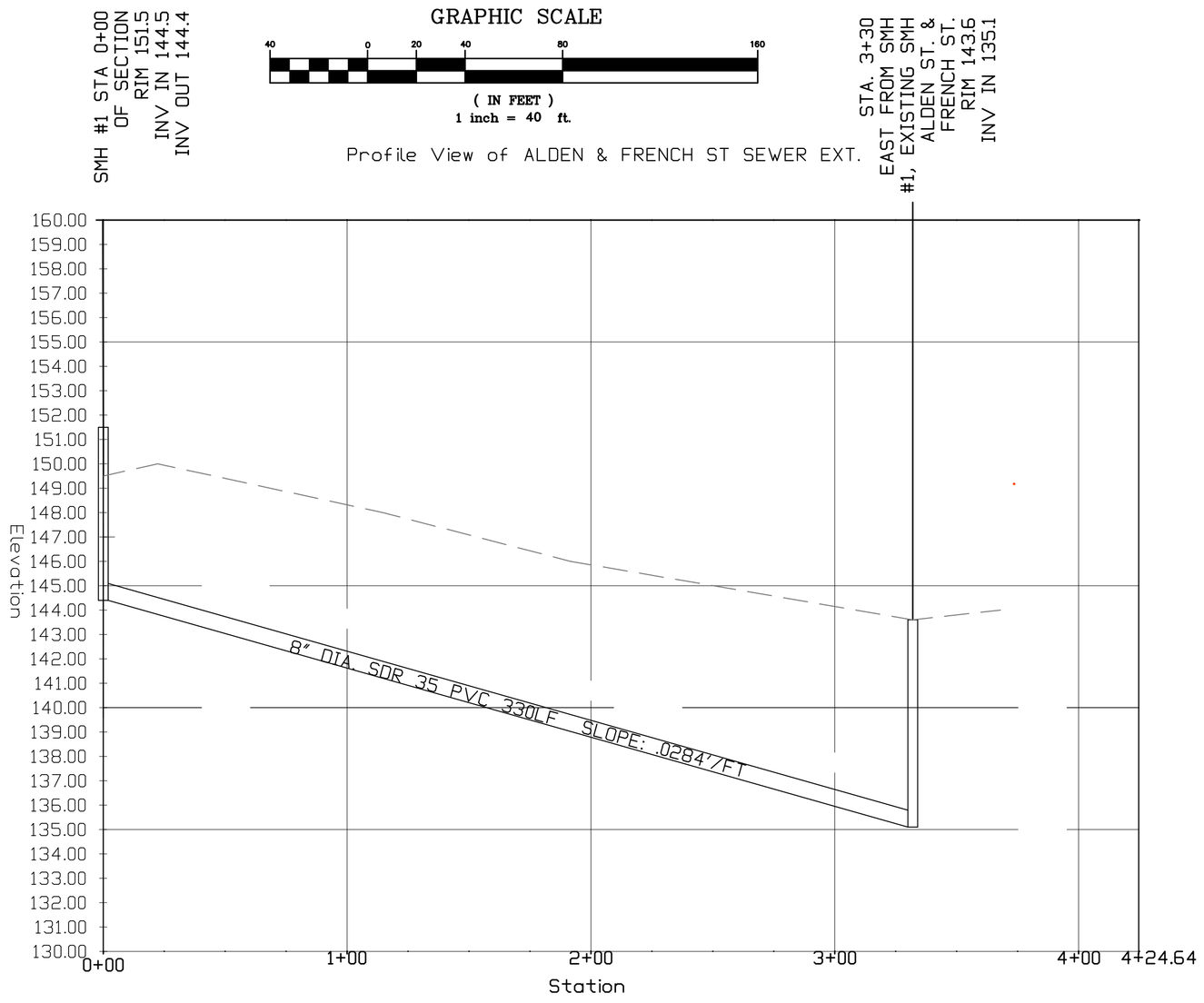

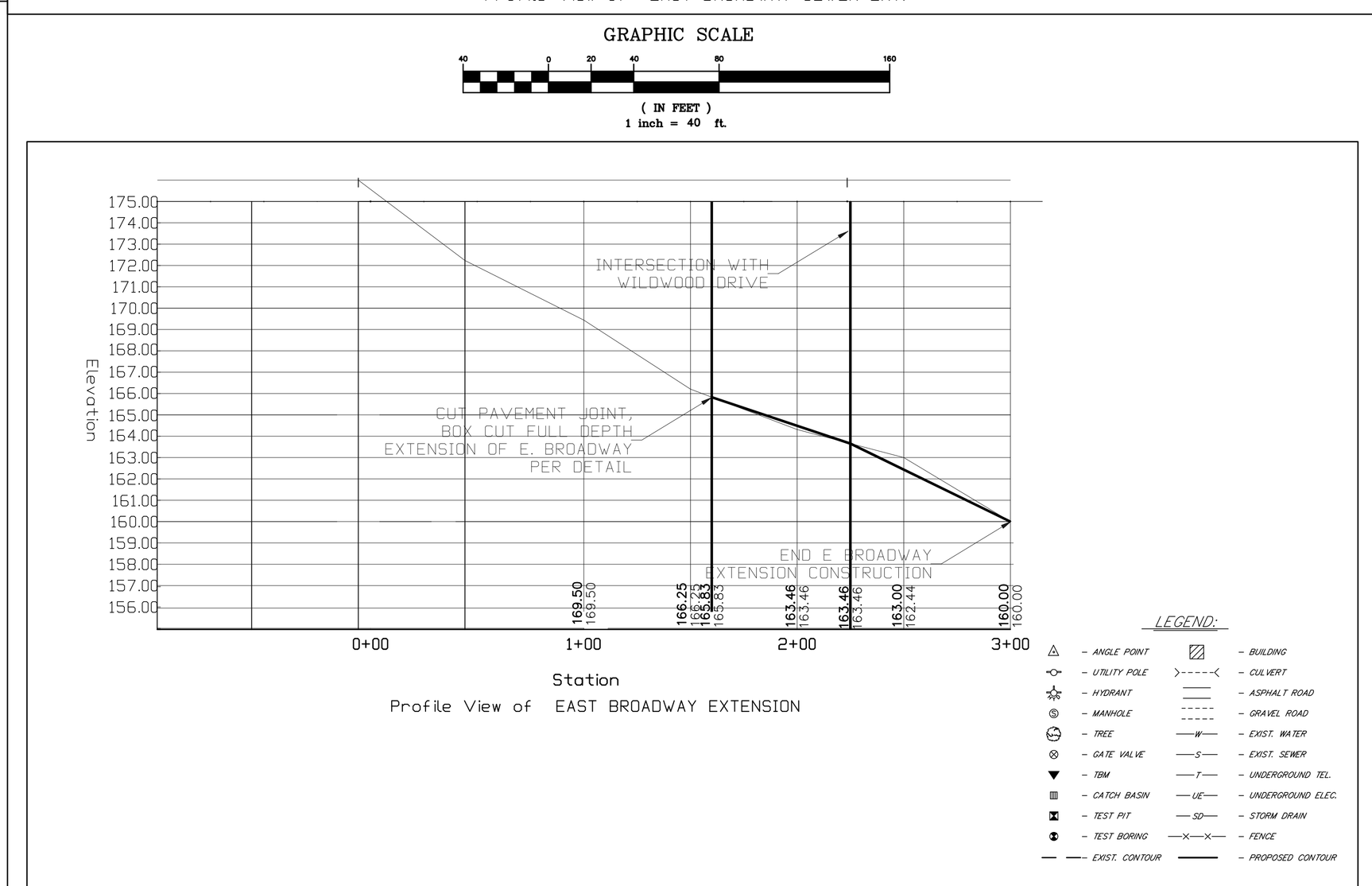

REVISIONS

NO.	DATE	DESCRIPTION	DRAWN	APPD.
1	11/8/23	RESPONSE TO CITY COMMENTS	SEB	SEB
2	11/16/23	RESPONSE TO CITY COMMENTS	SEB	SEB

PROJECT NAME: THE MAINE WOODS SUBDIVISION
LANCASTER AVE., BANGOR, PENOBSCOT COUNTY MAINE
SHEET NAME: SITE LAYOUT EAST BROADWAY EXT.

PROJECT NO. 22083
DRAWING NO. 22083 BASE.DWG
FIELDBOOK: N/A
SCALE: AS SHOWN
DATE ISSUED: 11/7/23

DESIGNED: SEB
DRAWN: AAK
CHECKED: SEB
APPROVED: SEB
PLAN DATE: 11/7/23
CLIENT & OWNER: TEAM PROPERTIES 1417 ESSEX ST BANGOR, ME 04401

Plymouth Engineering, Inc.
P.O. Box 46 30 Lower Detroit Road
Plymouth, Maine 04969
Tel: (207) 257-2071 Fax: (207) 257-2130
info@plymouthengineering.com
www.plymouthengineering.com

FOR PERMIT ONLY
STATE OF MAINE SCOTT E. BRADY No. 6022 LICENSED PROFESSIONAL ENGINEER 11/20/23
DRAWINGS NOT SEALED ARE FOR PLANNING PURPOSES ONLY AND ARE NOT INTENDED FOR PERMITTING, BIDDING OR CONSTRUCTION

SHEET 8 OF 17

C7

Nov 28, 2023 - 10:11am
J:\2022\22083 - Team Properties The Maine Woods Subdivision - Bangor - Team Properties\J. Drawings\CIVIL\2023 permitting\111623 22083 base.dwg

EROSION AND SEDIMENT CONTROL PLAN

Pre–Construction Phase
A person who conducts, or causes to be conducted, an activity that involves filling, displacing or exposing soil or other earthen materials shall take measures to prevent unreasonable erosion of soil or sediment beyond the project site or into a protected natural resource as defined in 38 MRSA § 480–B. Erosion control measures must be in place before the activity begins. Measures must remain in place and functional until the site is permanently stabilized. Adequate and timely temporary and permanent stabilization measures must be taken. The site must be maintained to prevent unreasonable erosion and sedimentation. Minimize disturbed areas and protect natural downgradient buffer areas to the extent practicable.

BMP Construction Phase
A. Sediment barriers. Prior to the beginning of any construction, properly install sediment barriers at the edge of any downgradient disturbed area and adjacent to any drainage channels within the proposed disturbed area. Maintain the sediment barriers until the disturbed area is permanently stabilized.

B. Construction entrance: Prior to any clearing or grubbing, a construction entrance shall be constructed at the intersection with the proposed access drive and the existing roadway to avoid tracking of mud, dust and debris from the site.

C. Riprap: Since riprap is used where erosion potential is high, construction must be sequenced so that the riprap is put in place with the minimum delay. Disturbance of areas where riprap is to be placed should be undertaken only when final preparation and placement of the riprap can follow immediately behind the initial disturbance. Where riprap is used for outlet protection, the riprap should be placed before or in conjunction with the construction of the pipe or channel so that it is in place when the pipe or channel begins to operate. Maintain temporary riprap, such as temporary check dams until the disturbed area is permanently stabilized.

D. Temporary stabilization. Stabilize with temporary seeding, mulch, or other non–erodable cover any exposed soils that will remain unworked for more than 14 days except, stabilize areas within 100 feet of a wetland or waterbody within 7 days or prior to a predicted storm event, whichever comes first. If hay or straw mulch is used, the application rate must be 2 bales (70–90 pounds) per 1000 sf or 1.5 to 2 tons (90–100 bales) per acre to cover 75 to 90% of the ground surface. Hay mulch must be kept moist or anchored to prevent wind blowing. An erosion control blanket or mat shall be used at the base of grassed waterways, steep slopes (15% or greater) and on any disturbed soil within 100 feet of lakes, streams and wetlands. Grading shall be planned so as to minimize the length of time between initial soil exposure and final grading. On large projects this should be accomplished by phasing the operation and completing the first phase up to final grading and seeding before starting the second phase, and so on.

E. Vegetated waterway. Upon final grading, the disturbed areas shall be immediately seeded to permanent vegetation and mulched and will not be used as outlets until a dense, vigorous vegetative cover has been obtained. Once soil is exposed for waterway construction, it should be immediately shaped, graded and stabilized. Vegetated waterways need to be stabilized early during the growing season (prior to September 15). If final seeding of waterways is delayed past September 15, emergency provisions such as sod or riprap may be required to stabilize the channel. Waterways should be fully stabilized prior to directing runoff to them.

Permanent Stabilization Defined
A. Seeded areas. For seeded areas, permanent stabilization means an 90% cover of the disturbed area with mature, healthy plants with no evidence of washing or rilling of the topsoil.

B. Sodded areas. For sodded areas, permanent stabilization means the complete binding of the sod roots into the underlying soil with no slumping of the sod or die–off.

C. Permanent mulch. For mulched areas, permanent mulching means total coverage of the exposed area with an approved mulch material. Erosion control mix may be used as mulch for permanent stabilization according to the approved application rates and limitations.

D. Riprap. For areas stabilized with riprap, permanent stabilization means that slopes stabilized with riprap have an appropriate backing of a well–graded gravel or approved geotextile to prevent soil movement from behind the riprap. Stone must be sized appropriately. It is recommended that angular stone be used.

E. Agricultural use. For construction projects on land used for agricultural purposes (E.G., pipelines across crop land), permanent stabilization may be accomplished by returning the disturbed land to agricultural use.

F. Paved areas. For paved areas, permanent stabilization means the placement of the compacted gravel subbase is completed.

G. Ditches, channels, and swales. For open channels, permanent stabilization means the channel is stabilized with mature vegetation at least three inches in height, with well–graded riprap, or with another non–erosive lining capable of withstanding the anticipated flow velocities and flow depths without reliance on check dams to slow flow. There must be no evidence of slumping of the lining, undercutting of the banks, or down–cutting of the channel.

General Construction Phase
The following erosion control measures shall be followed by the contractor throughout construction of this project:

A. All topsoil shall be collected, stockpiled, seeded with rye at 3 pounds/1,000 sf and mulched, and reused as required. Silt fencing shall be placed down gradient from the stockpiled loam. Stockpile to be located by designation of the owner and inspecting engineer.

B. The inspecting engineer at his/her discretion, may require additional erosion control measures and/or supplemental vegetative provisions to maintain stability of earthworks and finish graded areas. The contractor shall be responsible for providing and installing any supplemental measures as directed by the inspecting engineer. Failure to comply with the engineer's directions will result in discontinuation of construction activities.

C. Erosion control mesh shall be applied in accordance with the plans over all finish seeded areas as specified on the design plans.

D. All graded or disturbed areas including slopes shall be protected during clearing and construction in accordance with the approved erosion and sediment control plan until they are adequately stabilized.

E. All erosion, and sediment control practices and measures shall be constructed, applied and maintained in accordance with the approved erosion and sediment control plan.

F. Areas to be filled shall be cleared, grubbed and stripped of topsoil to remove trees, vegetation, roots or other objectionable materials.

G. Areas shall be scarified to a minimum depth of 3 inches prior to placement of topsoil.

H. All fills shall be compacted as required to reduce erosion, slippage, settlement, subsidence or other related problems. Fill intended to support buildings, structures and conduits, etc., shall be compacted in accordance with local requirements or codes.

I. All fills shall be placed and compacted in layers not to exceed 8 inches in thickness.

J. Except for approved landfills or non–structural fills, fill material shall be free of brush, rubbish, rocks, logs, stumps, building debris and other objectionable materials that would interfere with or prevent construction of satisfactory lifts.

K. Frozen material or soft, mucky or highly compressible materials shall not be incorporated into fill slopes or structural fills.

L. Fill shall not be placed on a frozen foundation.

M. Seeps or springs encountered during construction shall be handled appropriately.

N. All graded areas shall be permanently stabilized immediately following finished grading.

O. Remove any temporary control measures, such as silt fence, within 30 days after permanent stabilization is attained. Remove any accumulated sediments and stabilize.

Permanent Vegetation
Permanent vegetative cover should be established on disturbed areas where permanent, long lived vegetative cover is needed to stabilize the soil, to reduce damages from sediment and runoff, and to enhance the environment.

Seedbed Preparation
A. Grade as feasible to permit the use of conventional equipment for seedbed preparation, seeding, mulch application and anchoring, and maintenance.

B. Apply limestone and fertilizer according to soil tests such as those offered by the University of Maine soil testing laboratory. Soil sample mailers are available from the local cooperative extension service office. If soil testing is not feasible on small or variable sites, or where timing is critical, fertilizer may be applied at the rate of 800 pounds per acre or 18.4 pounds per 1,000 square feet using 10–20–20 (n–p2o5–k2o) or equivalent. Apply ground limestone (equivalent to 50% calcium plus magnesium oxide) at a rate of 3 tons per acre (138 lb. Per 1,000 sq. Ft).

C. Work lime and fertilizer into the soil as nearly as practical to a depth of 4 inches with a disc, spring tooth harrow or other suitable equipment. The final harrowing operation should be on the general contour. Continue tillage until a reasonably uniform, fine seedbed is prepared. All but clay or silty soils and coarse sands should be rolled to firm the seedbed wherever feasible.D. Remove from the surface all stones 2 inches or larger in any dimension. Remove all other debris, such as wire, cable, tree roots, concrete, clods, lumps or other unsuitable material.

E. Inspect seedbed just before seeding. If traffic has left the soil compacted; the area must be tilled and firmed as above.

F. Permanent seeding should be made 45 days prior to the first killing frost or as a dormant seeding with mulch after the first killing frost and before snowfall. When crown vetch is seeded in later summer, at least 35% of the seed should be hard seed (unscarified). If seeding cannot be done within the seeding dates, mulch according to the temporary mulching BMP and overwinter stabilization and construction to protect the site and delay seeding until the next recommended seeding period.

G. Following seed bed preparation, swale areas, fill areas and back slopes shall be seeded at a rate of 3 lbs./1,000 s.F. With a mixture of 35% creeping red h. Fescue, 6% red top, 24% Kentucky bluegrass, 10% perennial ryegrass, 20% annual ryegrass and 5% white Dutch clover.

I. Areas which have been temporarily or permanently seeded shall be mulched immediately following seeding.

J. Areas which cannot be seeded within the growing season shall be mulched for over–winter protection and the area should be seeded at the beginning of the growing season.

Winter Construction Phase
If an area is not stabilized with temporary or permanent measures by November 15, then the site must be protected with additional stabilization measures.

A. Permanent stabilization consists of at least 90% vegetation, pavement/gravel base or riprap.

B. Do not expose slopes or leave slopes exposed over the winter or for any other extended time of work suspension unless fully protected with mulch.

C. Apply hay mulch at twice the standard rate (150 lbs. Per 1,000 sf). The mulch must be thick enough such that the ground surface will not be visible and must be anchored.

D. Use mulch and mulch netting or an erosion control mulch blanket or all slopes greater than 8 % or other areas exposed to direct wind.

E. Install an erosion control blanket in all drainageways (bottom and sides) with a slope greater than 3 %.

F. See the vegetation measures for more information on seeding dates and types.

G. Winter excavation and earthwork shall be completed so that no more than 1 acre of the site is without stabilization at any one time.

H. An area within 100 feet of a protected natural resource must be protected with a double row of sediment barrier.

I. Temporary mulch must be applied within 7 days of soil exposure or prior to any storm event, but after every workday in areas within 100 feet from a protected natural resource.

J. Areas that have been brought to final grade must be permanently mulched that same day.

K. If snowfall is greater than 1 inch (fresh or cumulative), the snow shall be removed from the areas due to be seeded and mulched.

L. Loam shall be free of frozen clumps before it is applied.

M. All vegetated ditch lines that have not been stabilized by November 1, or will be worked during the winter construction period, must be stabilized with an appropriate stone lining backed by an appropriate gravel bed or geotextile unless specifically released from this standard by the department.

Maintenance and Inspection Phase
A. Contractor shall inspect disturbed and impervious areas, and erosion and stormwater control measures, areas used for storage that are exposed to precipitation, and locations where vehicles enter or exit the parcel at least once a week and before and after a storm event, prior to completion of permanent stabilization. A person with knowledge of erosion and stormwater must conduct the inspection. This person must be identified in the inspection log. If best management practices (BMPs) need to be modified or if additional BMPs are necessary, implementation must be completed within 7 calendar days and prior to any storm event (rainfall). All measures must be maintained in effective operating condition until areas are permanently stabilized.

B. A log (report) must be kept summarizing the scope of the inspection, name(s) and qualifications of the personnel making the inspection, the date(s) of the inspection, and major observations relating to operation of erosion and sedimentation controls and pollution prevention measures. Major observations must include: BMPs that need to be maintained; location(s) of BMPs that failed to operate as designed or proved inadequate for a particular location; and location(s) where additional BMPs are needed that did not exist at the time of inspection. Follow–up to correct deficiencies or enhance controls must also be indicated in the log and dated, including what action was taken and when.

NOTE:
DURING PERIODS OF WINTER CONSTRUCTION (NOV. 15 THROUGH APRIL 15), THE CONTRACTOR SHALL INSTALL EROSION CONTROL MIX BERMS IN LIEU OF SILT FENCE.

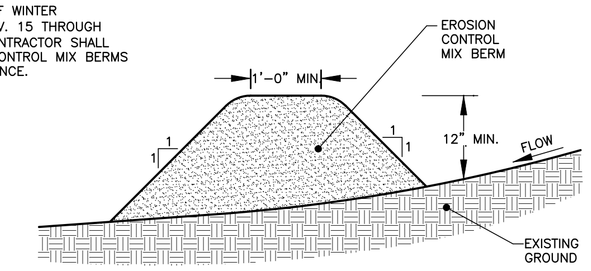

EROSION CONTROL MIX:
EROSION CONTROL MIX SHALL CONTAIN A WELL–GRADED MIXTURE OF PARTICLE SIZES & MAY CONTAIN ROCKS LESS THAN 4" IN DIAMETER. EROSION CONTROL MIX MUST BE FREE OF REFUSE, PHYSICAL CONTAMINANTS, AND MATERIAL TOXIC TO PLANT GROWTH. THE MIX COMPOSITION SHALL MEET THE FOLLOWING STANDARDS:
– THE ORGANIC MATTER CONTENT SHALL BE BETWEEN 80% – 100% DRY WEIGHT BASIS
– PARTICLE SIZE BY WEIGHT SHALL BE 100% PASSING A 6" SCREEN AND A MINIMUM OF 70%, MAXIMUM OF 85% PASSING A 0.75" SCREEN
– THE ORGANIC PORTION NEEDS TO BE FIBROUS AND ELONGATED
– LARGE PORTIONS OF SILTS, CLAYS OR FINE SANDS ARE NOT ACCEPTABLE IN THE MIX.
– SOLUBLE SALTS CONTENT SHALL BE < 4.0 mmhos/cm.
– ph SHALL FALL BETWEEN 5.0 – 8.0.

EROSION CONTROL MIX BERM
NOT TO SCALE

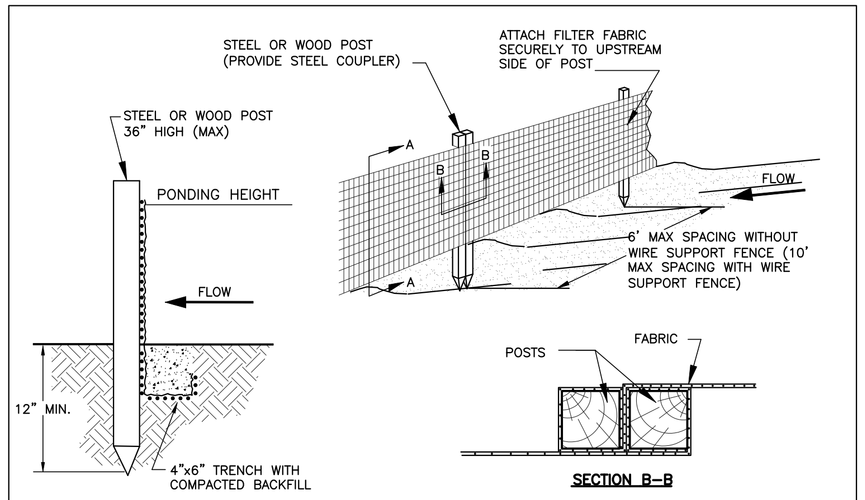

SILT FENCE
NOT TO SCALE

CONSTRUCTION NOTES:

1. All work shall conform to the applicable codes and ordinances.

2. Contractor shall visit the site and familiarize him or herself with all conditions affecting the proposed work and shall make provisions as to the cost thereof. Contractor shall be responsible for familiarizing him or herself with all contract documents, field conditions and dimensions and confirming that the work may be accomplished as shown prior to proceeding with construction. Any discrepancies shall be brought to the attention of the engineer prior to the commencement of work.

3. Contractor shall notify engineer of all products or items noted as "existing" which are not found in the field.

4. Install all equipment and materials in accordance with manufacturer's recommendations and owner's requirements unless specifically otherwise indicated or where local codes or regulations take precedence.

5. Contractor shall verify all dimensions and conditions in the field prior to fabrication and erection of any material. Any unusual conditions shall be reported to the attention of the engineer.

6. Contractor shall clean and remove debris and sediment deposited on public streets, sidewalks, adjacent areas, or other public ways due to construction.

7. Contractor shall incorporate provisions as necessary in construction to protect existing structures, physical features, and maintain site stability during construction. Contractor shall restore all areas to original condition and as directed by design drawings.

8. Site contractor shall obtain all required permits prior to construction.

9. All erosion and sediment control measures shall be installed in accordance with "Maine Erosion and Sedimentation Control Handbook for Construction: Best Management Practices" published by the Cumberland County Soil and Water Conservation District and Maine Department of Environmental Protection, March 2004 or latest edition. It shall be the responsibility of the contractor to possess a copy of the erosion control plan at all times.

10. The contractor is hereby cautioned that all site features shown hereon are based on field observations by the surveyor and by information provided by utility companies. The information is not to be relied on as being exact or complete. The contractor shall contact Dig Safe (1–888–digsafe) at least three (3) but not more than thirty (30) days prior to commencement of excavation or demolition to verify horizontal and vertical location of all utilities.

11. Contractor shall be aware that Dig Safe only notifies its "member" utilities about the dig. When notified, Dig Safe will advise contractor of member utilities in the area. Contractor is responsible for identifying and contacting non–member utilities directly. Non–member utilities may include town or city water and sewer districts and small local utilities, as well as USG public works systems.

12. Contractors shall be responsible for compliance with the requirements of 23 MRSA 3360–A. It shall be the responsibility of the contractor to coordinate with the appropriate utilities to obtain authorization prior to relocation of any existing utilities which conflict with the proposed improvements shown on these plans. If a utility conflict arises, the contractor shall immediately notify the owner, the municipality and appropriate utility company prior to proceeding with any relocation.

13. All pavement markings and directional signage shown on the plan shall conform to the Manual of Uniform Traffic Control Devices (MUTCD) standards.

14. All pavement joints shall be sawcut prior to paving to provide a durable and uniform joint.

15. No holes, trenches or structures shall be left open overnight in any excavation accessible to the public or in public rights–of–way.

16. All work within the public right–of–way shall require a M.D.O.T. Permit as well as permits from the town as applicable.

17. The proposed limits of clearing shown hereon are approximate based upon the proposed limits of site grading. The applicant reserves the right to perform normal forest management activities outside of the clearing limit as shown. Tree removal outside of the limits of clearing may be necessary to remove dead or dying trees or tree limbs. This removal is due to potential safety hazards and to promote proper forest growth.

18. Immediately upon completion of cuts/fills, the contractor shall stabilize disturbed areas in accordance with erosion control notes and as specified on plans.

19. The contractor shall be fully and solely responsible for the removal, replacement and rectification of all damaged and defective material and workmanship in connection with the contract work. The contractor shall replace or repair as directed by the owner all such damaged or defective materials which appear within a period of one year from the date of substantial completion.

20. All work performed by the general contractor and/or trade subcontractor shall conform to the requirements of local, state or federal laws, as well as any other governing requirements, whether or not specified on the drawings.

21. Where the terms "approved equal", "other approved", "equal to", "acceptable" or other general qualifying terms are used in these notes, it shall be understood that reference is made to the ruling and judgment of the owner and/or owner's engineer.

22. The general contractor shall provide all necessary protection for the work until turned over to the owner.

23. The general contractor shall maintain a current and complete set of construction drawings on site during all phases of construction for use of all trades.

24. The contractor shall take full responsibility for any changes and deviation of approved plans not authorized by the architect/engineer and/or client/owner.

25. Details are intended to show end result of design. Any modification to suit field dimension and condition shall be submitted to the engineer for review and approval prior to any work.

26. Before the final acceptance of the project, the contractor shall remove all equipment and materials, repair or replace private or public property which may have been damaged or destroyed during construction, clean the areas within and adjacent to the project which have been obstructed by his/her operations, and leave the project area neat and presentable.

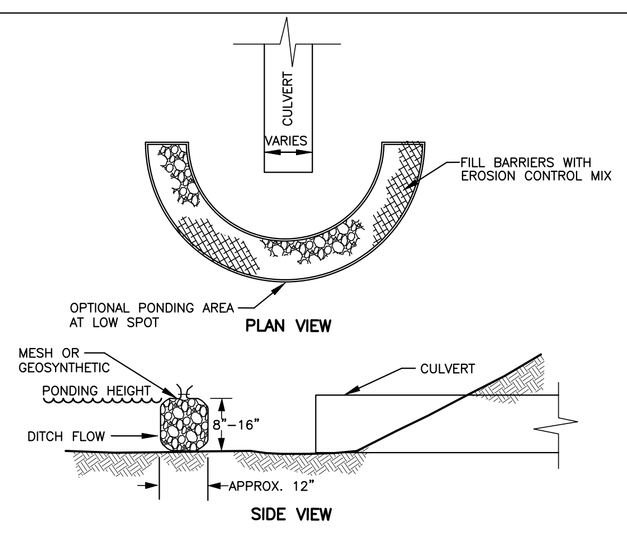

CULVERT INLET EROSION CONTROL
NOT TO SCALE

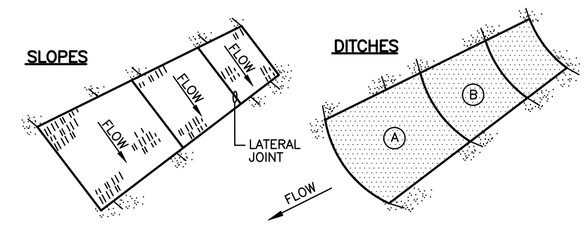

NOTES:
1. BURY THE TOP END OF THE MESH MATERIAL IN A 6" TRENCH AND BACKFILL AND TAMP TRENCHING SECURE END WITH STAPLES AT 6" SPACING, 4" DOWN FROM EXPOSED END.
2. FLOW DIRECTION JOINTS TO HAVE UPPER END OF LOWER STRIP BURIED WITH UPPER LAYERS OVERLAPPED 4" AND STAPLED. OVERLAP B OVER A.
3. LATERAL JOINTS TO HAVE 4" OVERLAP OF STRIPS. STAPLE 18" ON CENTER.
4. STAPLE OUTSIDE LATERAL EDGE 2' ON CENTER.
5. WIRE STAPLES TO BE MIN. OF #11 WIRE, 6" LONG & 1–1/2" WIDE.
6. USE NORTH AMERICAN GREEN DS 150 (OR APPROVED EQUAL) ON SLOPES BETWEEN 4:1–2:1. USE NORTH AMERICAN GREEN VMAX SC250 PERMANENT TURF REINFORCEMENT MAT (OR APPROVED EQUAL) ON SLOPES 2:1 AND STEEPER..

EROSION CONTROL BLANKET
NOT TO SCALE

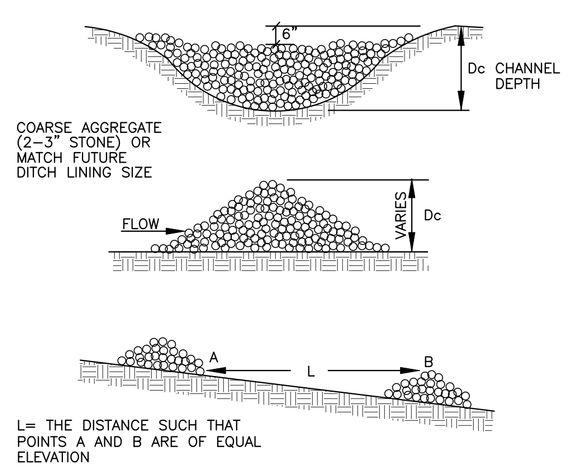

STONE CHECK DAM
NOT TO SCALE

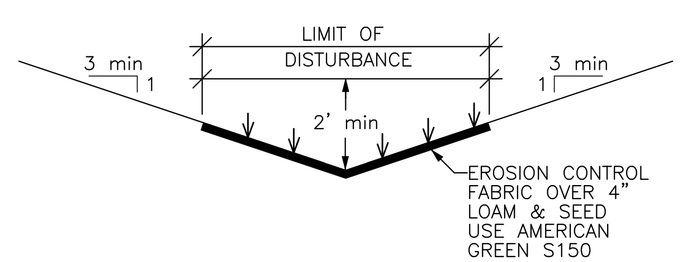

GRASSED SWALE/DITCH DETAIL
NOT TO SCALE

NOTE
1. ALL ROAD SLOPES LESS THAN 5%
2. BOTTOM OF FINISHED DITCH TO BE BELOW BOTTOM OF SUBBASE GRAVEL OF ADJACENT ROAD
3. SLOPE OF DITCH LINE TO MATCH OR EXCEED ROAD PROFILE.
4. BACK SLOPE SHALL BE 2:1 MAX

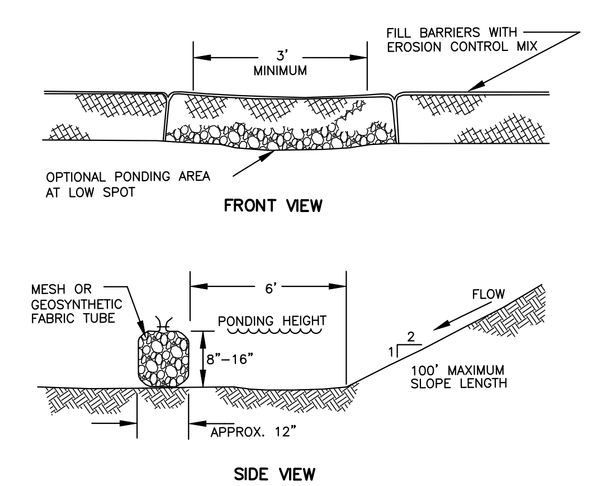

FILTER SOCK DETAIL
NO SCALE

REVISIONS

NO.	DATE	DESCRIPTION	DRAWN	APPD.
1	11/8/23	RESPONSE TO CITY COMMENTS	SEB	SEB
2	11/16/23	RESPONSE TO CITY COMMENTS	SEB	SEB

PROJECT NAME: THE MAINE WOODS SUBDIVISION
LANCASTER AVE., BANGOR, PENOBSCOT COUNTY MAINE
SHEET NAME: EROSION & SEDIMENT CONTROL

PROJECT NO. 22083
DRAWING NO. 22083 BASE.DWG
FIELDBOOK: N/A
SCALE: AS SHOWN
DATE ISSUED: 11/7/23

DESIGNED: SEB
DRAWN: AAK
CHECKED: SEB
APPROVED: SEB
PLAN DATE: 11/7/23
CLIENT & OWNER: TEAM PROPERTIES 141 ESSEX ST. BANGOR, ME 04401

Plymouth Engineering, Inc.
P.O. Box 46 30 Lower Detroit Road
Plymouth, Maine 04969
Tel: (207) 257–2071 Fax: (207) 257–2130
info@plymouthengineering.com
www.plymouthengineering.com

FOR PERMIT ONLY
STATE OF MAINE SCOTT E. BRALEY No. 6222 LICENSED PROFESSIONAL ENGINEER
11/20/23
DRAWINGS NOT SEALED ARE FOR PLANNING PURPOSES ONLY AND ARE NOT INTENDED FOR PERMITTING, BIDDING OR CONSTRUCTION

Nov 21, 2023 - 9:59am
J:\2022\22083 - Team Properties The Maine Woods Subdivision - Bangor - Team Properties\J. Drawings\CIVIL\2023 permitting\111623 22083 base.dwg

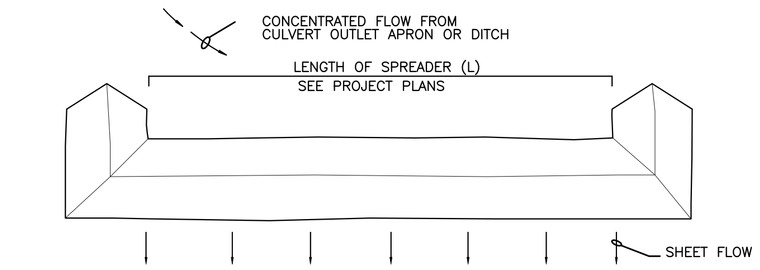

PLAN

LEVEL SPREADER NOTES

1. ALL LEVEL SPREADERS SHALL BE CONSTRUCTED IN ACCORDANCE WITH "BEST MANAGEMENT PRACTICES", BY THE CUMBERLAND COUNTY SOIL AND WATER CONSERVATION DISTRICT.
2. ALL LEVEL SPREADERS SHALL BE CONSTRUCTED IN A CUT SECTION, I.E. THERE SHALL BE NO EARTH FILL ALONG THE DOWNSTREAM EDGE.
3. LEVEL SPREADER LEGNTHS ARE SHOWN ON THE PLAN VIEWS AND ALIGNED PARALLEL TO THE EXISTING CONTOURS.
4. THE LEVEL SPREADER SHALL HAVE A LONGITUDINAL GRADE OF 0.0 %.

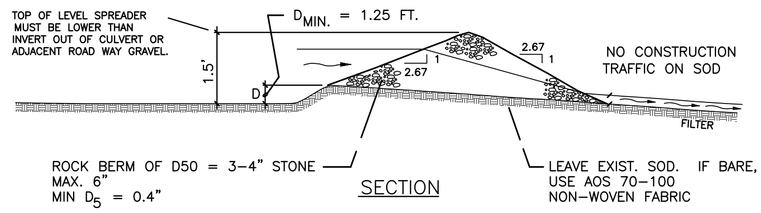

SECTION

LEVEL SPREADER DETAIL

NOT TO SCALE

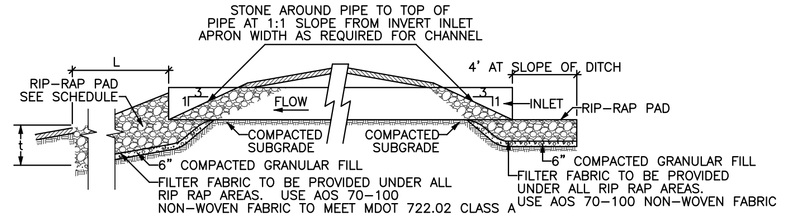

RIP RAP INLET SCHEDULE				
DIA.	d50	t	L	W
12"	4"	9"	3.5'	3.0'
15"	5"	12"	4.5'	3.75'
18"	6"	14"	5.25'	4.5'
24"	6"	14"	7.0'	6.0'
36"	10"	23"	10.5'	9.0'
48"	12"	27"	14.0'	12.0'

RIP RAP OUTLET SCHEDULE				
DIA.	d50	t	L	W
12"	4"	9"	5'	4'
15"	5"	12"	6.25'	5'
18"	6"	14"	7.5'	6'
24"	6"	14"	10'	8'
36"	10"	23"	15'	12'
48"	12"	27"	20'	16'

CULVERT INLET/OUTLET DETAIL

NOT TO SCALE

NOTE

1. RIP RAP PROTECTION TO BE ANGULAR STONE

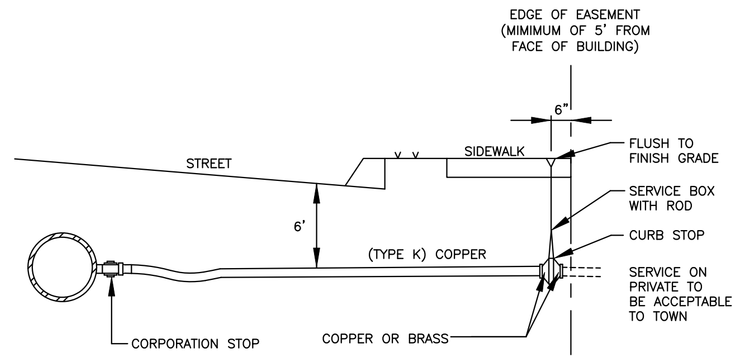

TYPICAL WATER SERVICE CONNECTION

NOT TO SCALE

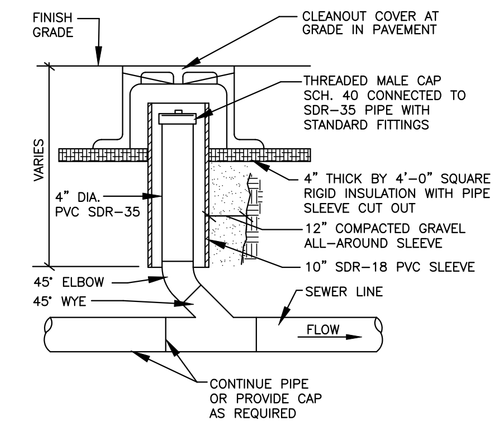

SEWER CLEANOUT IN PAVEMENT AREAS

NOT TO SCALE

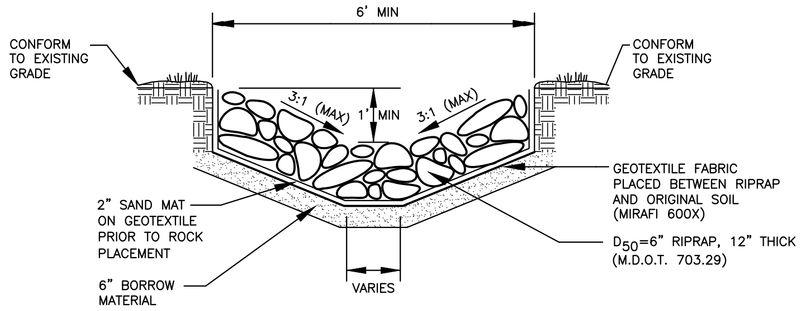

RIPRAP SWALE

NOT TO SCALE

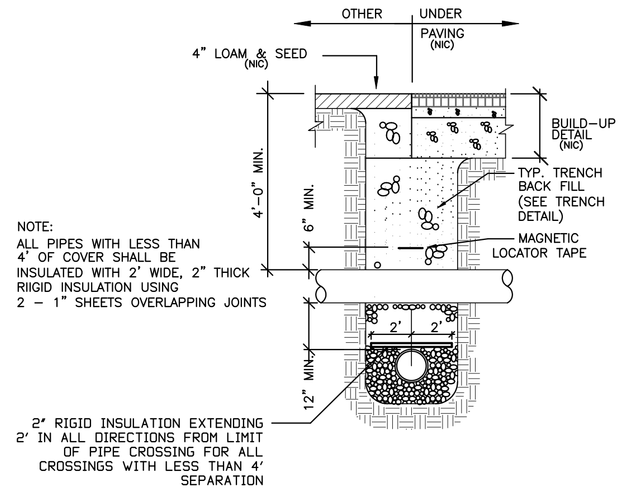

NOTE:
ALL PIPES WITH LESS THAN 4' OF COVER SHALL BE INSULATED WITH 2' WIDE, 2" THICK RIIGID INSULATION USING 2 - 1" SHEETS OVERLAPPING JOINTS

PIPE CROSSING DETAIL

NOT TO SCALE

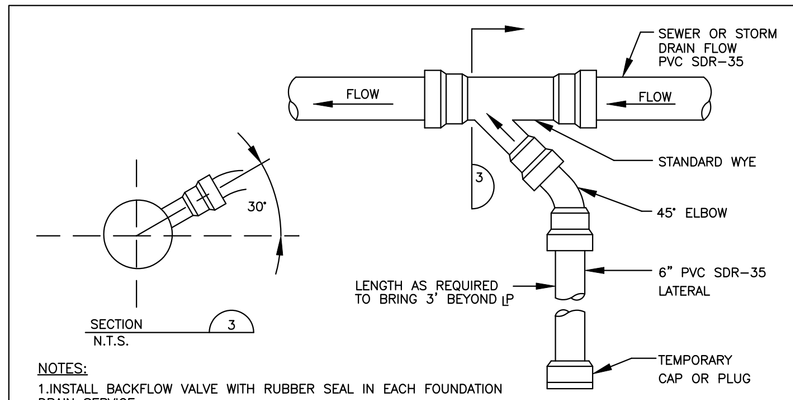

NOTES:

1. INSTALL BACKFLOW VALVE WITH RUBBER SEAL IN EACH FOUNDATION DRAIN SERVICE.
2. IF SUMP PUMP IS UTILIZED INSTALL CHECK VALVE AT SUMP PUMP.

SEWER / FOUNDATION DRAIN SERVICE CONNECTION

NOT TO SCALE

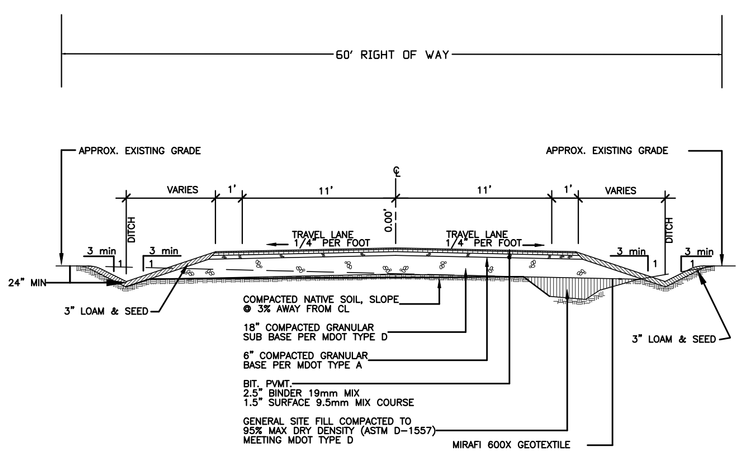

MINOR STREET SECTION

NOT TO SCALE

NOTE
MIRAFI 600X FABRIC TO BE PLACED UNDER SUB BASE LAYER IN ALL LOCATIONS.
MIRAFI 600X SHOULD EXTEND TO THE LIMITS OF THE GRANULAR SUB BASE.
CITY MAY REQUIRE REMOVAL OF UNSUITABLE SOILS IF ENCOUNTERED

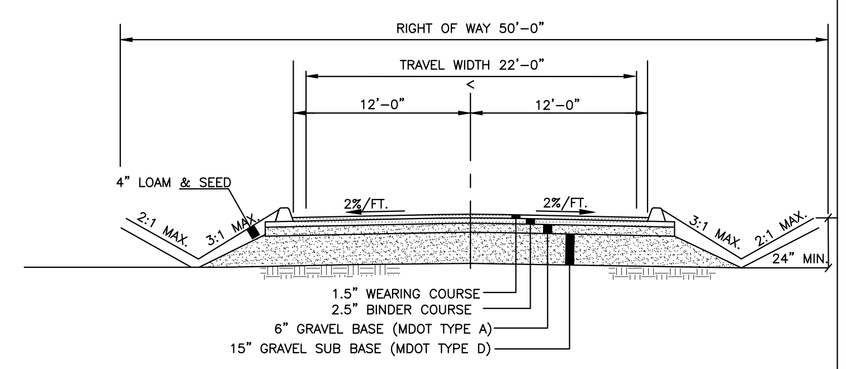

ACCESS ROAD (PRIVATE ROAD STANDARD)

NOT TO SCALE

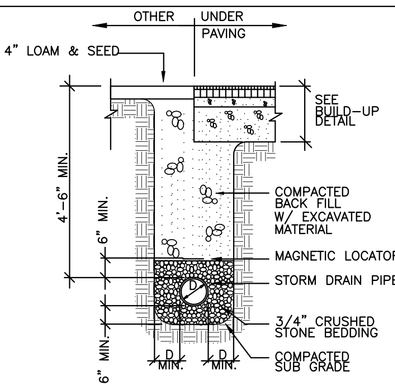

NOTES:

1. ALL BACKFILL PROCEDURES MUST BE PROVIDED USING MAXIMUM 8" LIFTS, LOOSE MEASURE.
2. ANY LINE TO BE PLACED WITH LESS THAN 4'-6" OF COVER MUST BE AUTHORIZED BY THE OWNER/ENGINEER AND MUST BE INSULATED WITH 2" RIGID INSULATION. WIDTH OF INSULATION SHALL BE BASED UPON DEPTH AND LOCATION.
3. ANY LINE CROSSING OF OTHER UTILITIES WHERE THE VERTICAL SEPARATION DISTANCE IS LESS THAN 2-FEET SHALL BE INSULATED WITH 2" RIGID INSULATION, IN ALL DIRECTIONS FOR A DISTANCE OF 2' FROM THE CROSSING. (SEE DETAIL)

STORM DRAIN/SANITARY SEWER TRENCH DETAIL

NOT TO SCALE

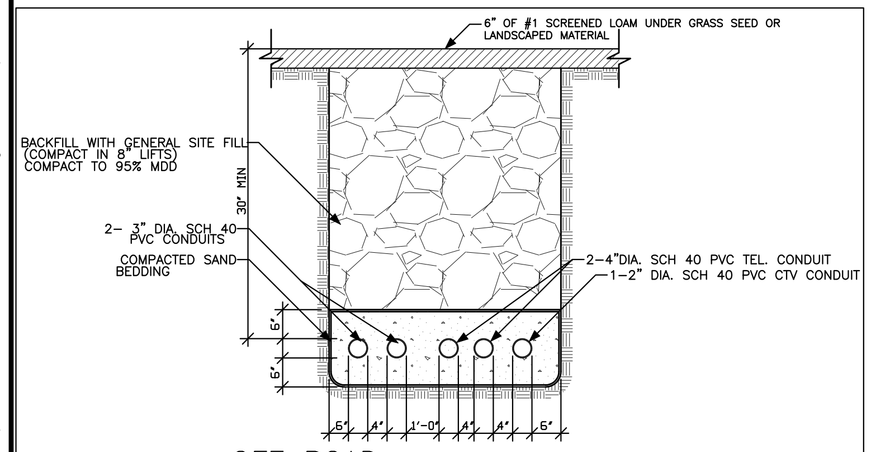

OFF ROAD ELECTRICAL TRENCH DETAIL

NO SCALE

NOTES:
NUMBER OF CONDUIT, MATERIAL, SIZE, & SEPARATION TO BE VERIFIED AT UTILITY PRECONSTRUCTION MEETING.

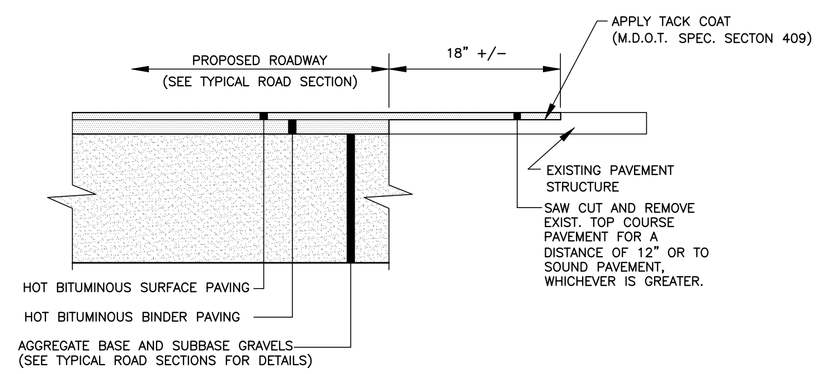

TYPICAL PAVEMENT JOINT

NOT TO SCALE

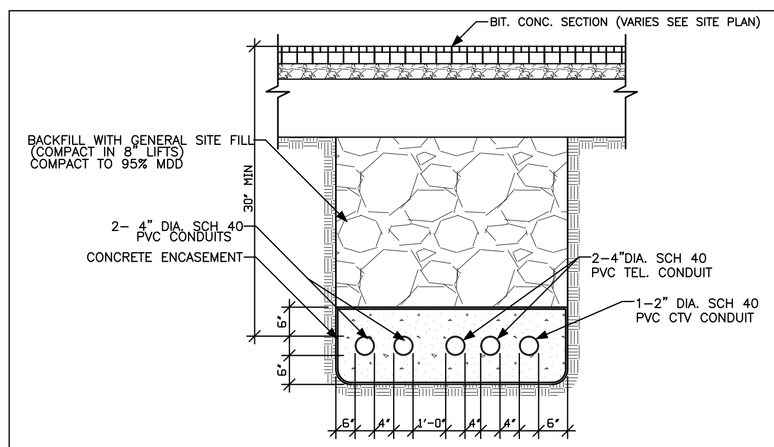

PAVEMENT CROSSING ELECTRICAL TRENCH DETAIL

NO SCALE

NOTES:
NUMBER OF CONDUIT, MATERIAL, SIZE, & SEPARATION TO BE VERIFIED AT UTILITY PRECONSTRUCTION MEETING.

REVISIONS

NO.	DATE	DESCRIPTION	DRAWN	APPD.
1	11/8/23	RESPONSE TO CITY COMMENTS	SEB	SEB
2	11/16/23	RESPONSE TO CITY COMMENTS	SEB	SEB

PROJECT NAME: THE MAINE WOODS SUBDIVISION
LANCASTER AVE., BANGOR, PENOBSCOT COUNTY MAINE

SHEET NAME: CONSTRUCTION DETAILS

PROJECT NO. 22083
DRAWING NO. 22083 BASE.DWG
FIELDBOOK: N/A
SCALE: AS SHOWN
DATE ISSUED: 11/7/23

DESIGNED: SEB
DRAWN: AAK
CHECKED: SEB
APPROVED: SEB
PLAN DATE: 11/7/23

CLIENT & OWNER:
TEAM PROPERTIES
1411 ESSEX ST.
BANGOR, ME 04401

Plymouth Engineering, Inc.
P.O. Box 46 30 Lower Detroit Road
Plymouth, Maine 04969
Tel: (207) 257-2071 Fax: (207) 257-2130
info@plymouthengineering.com
www.plymouthengineering.com

FOR PERMIT ONLY

STATE OF MAINE SCOTT E. BRAGG No. 6227 LICENSED PROFESSIONAL ENGINEER 11/20/23

DRAWINGS NOT SEALED ARE FOR PLANNING PURPOSES ONLY AND ARE NOT INTENDED FOR PERMITTING, BIDDING OR CONSTRUCTION

Nov 21, 2023 - 9:59am
J:\2022\22083 - Team Properties The Maine Woods Subdivision - Bangor - Team Properties\J. Drawings\CIVIL\2023 permitting\111623 22083 base.dwg

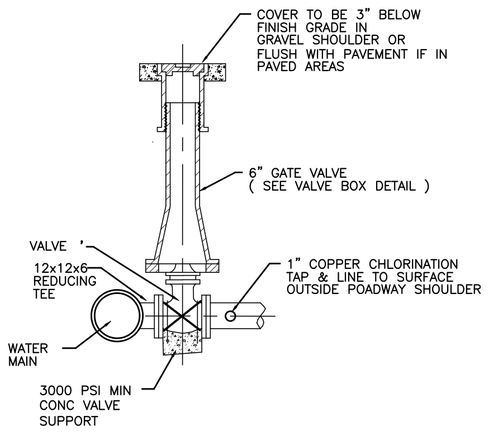

TYPICAL 6" FIRE SERVICE CONNECTION DETAIL

NOT NO SCALE

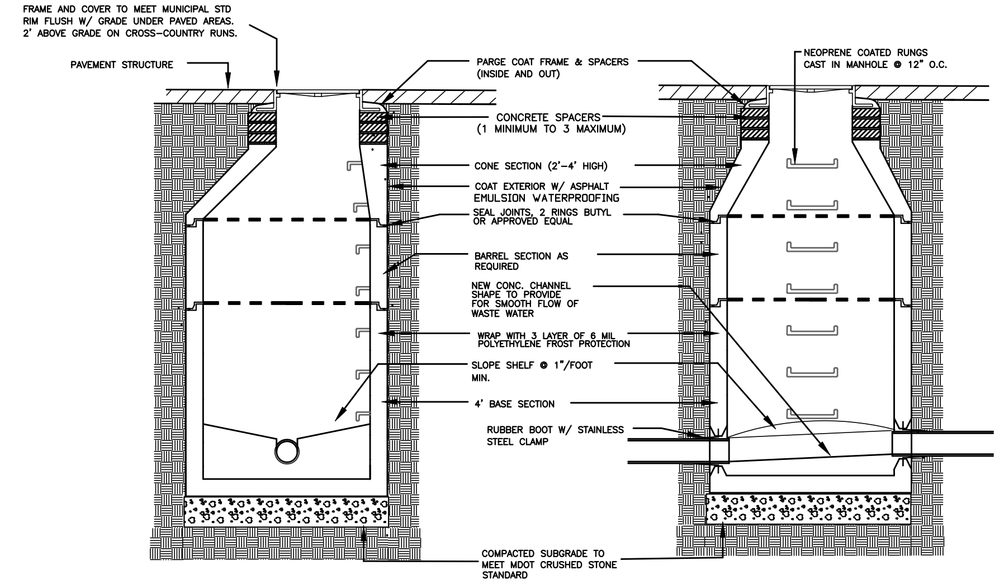

PRECAST MANHOLE DETAIL

NOT TO SCALE:

NOTE:

1. MIN MANHOLE DEPTH FROM COVER TO BASE TO BE 6'

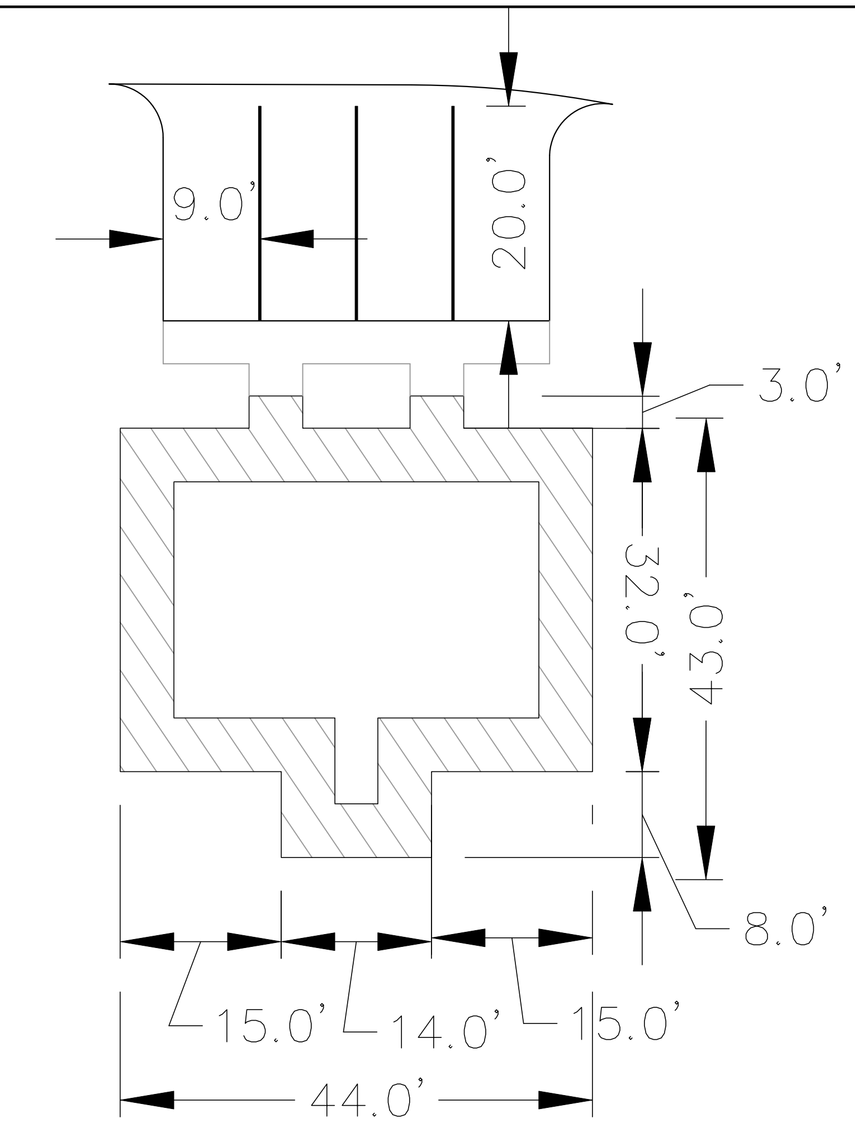

CONSTRUCTION DIMENSIONS

GRAPHIC SCALE

40 0 20 40 80 160

(IN FEET)
1 inch = 40 ft.

TYPICAL USES

PIPE SIZES	6"	8"	12"	16"
90 BEND	A	B	B	C
45 BEND	A	A	A	B
22.5 BEND	A	A	A	A
END	A	A	A	B
TEE	A	A	A	B

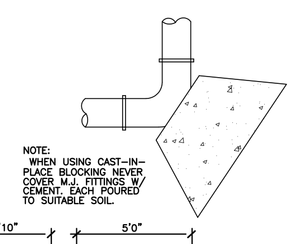

NOTE:
WHEN USING CAST-IN-PLACE BLOCKING NEVER COVER M.J. FITTINGS W/ CEMENT. EACH POURED TO SUITABLE SOIL.

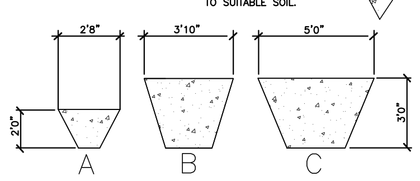

A = SMALL PRECAST (.22 YDS.) HT.= 24"
B = LARGE PRECAST (.97 YDS.) HT.= 36"
C = CAST-IN-PLACE (1.74 YDS.) HT. = 50"

THRUST BLOCK DETAIL & SPECIFICATIONS

NOT TO SCALE

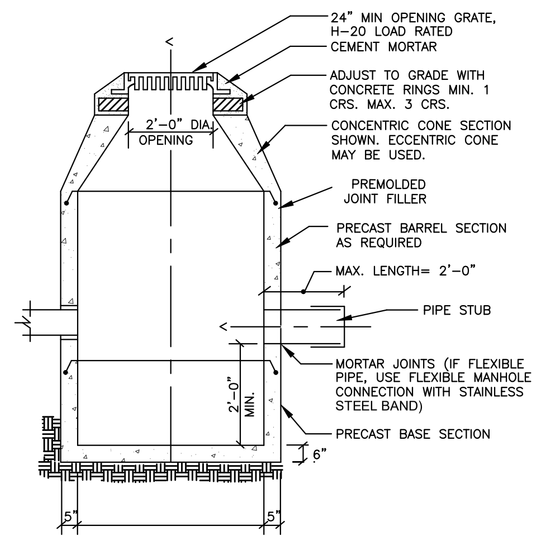

NOTES:

1. 4'-0" I.D. TYPICAL. SOME STRUCTURES MAY REQUIRE LARGER I.D. PROVIDE SHOP DRAWINGS.
2. DRAINAGE STRUCTURES TO BE DESIGNED FOR H-20 LOADING.
3. PIPE SIZES AND INVERTS AS NOTED ON PLANS.
4. CATCH BASIN FRAME AND GRATE TO MEET LOCAL STANDARDS

TYPICAL CATCH BASIN

NOT TO SCALE

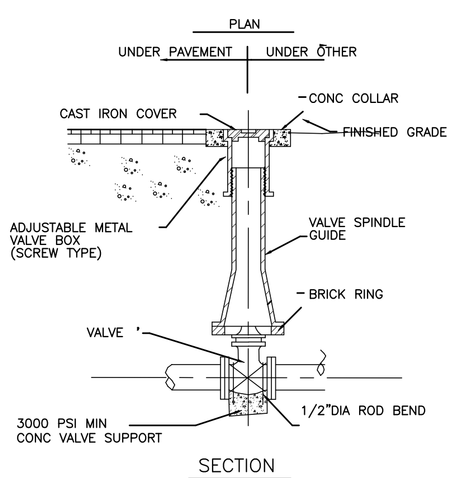

VALVE BOX DETAIL

NOT TO SCALE

REVISIONS

NO.	DATE	DESCRIPTION	DRAWN	APPD.
1	11/8/23	RESPONSE TO CITY COMMENTS	SEB	SEB
2	11/16/23	RESPONSE TO CITY COMMENTS	SEB	SEB

PROJECT NAME: THE MAINE WOODS SUBDIVISION
LANCASTER AVE., BANGOR, PENOBSCOT COUNTY MAINE
SHEET NAME: CONSTRUCTION DETAILS

PROJECT NO. 22083
DRAWING NO. 22083 BASE.DWG
FIELDBOOK: N/A
SCALE: AS SHOWN
DATE ISSUED: 11/7/23

DESIGNED: SEB
DRAWN: AAK
CHECKED: SEB
APPROVED: SEB
PLAN DATE: 11/7/23

CLIENT & OWNER:
TEAM PROPERTIES
1 MILL STREET
BANGOR, ME 04401

Plymouth Engineering, Inc.
P.O. Box 46 30 Lower Detroit Road
Plymouth, Maine 04969
Tel: (207) 257-2071 Fax: (207) 257-2130
info@plymouthengineering.com
www.plymouthengineering.com

FOR PERMIT ONLY

STATE OF MAINE SCOTT E. BRAILEY No. 6292 LICENSED PROFESSIONAL ENGINEER 11/20/23

DRAWINGS NOT SEALED ARE FOR PLANNING PURPOSES ONLY AND ARE NOT INTENDED FOR PERMITTING, BIDDING OR CONSTRUCTION

SHEET 11 OF 17

C10

Nov 21, 2023 - 10:00am
J:\2022\22083 - Team Properties The Maine Woods Subdivision - Bangor - Team Properties\J. Drawings\CIVIL\2023 permitting\111623 22083 base.dwg

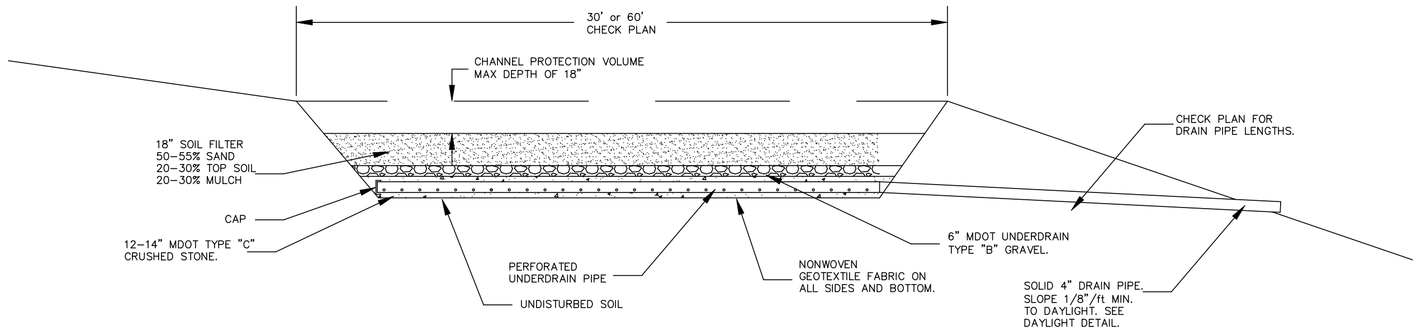

FILTER SWALE – PROFILE

Not To Scale

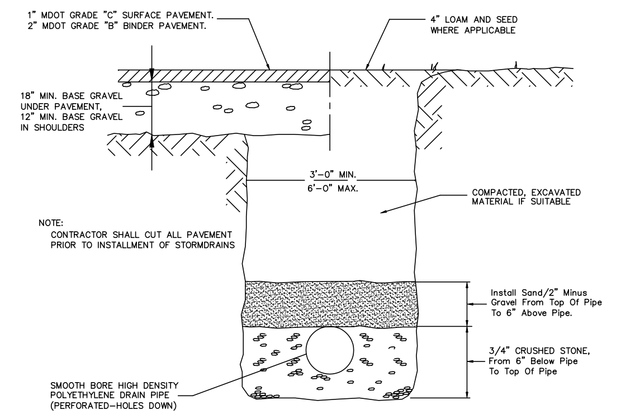

Typical HDPE Pipe Trench Detail

Not To Scale

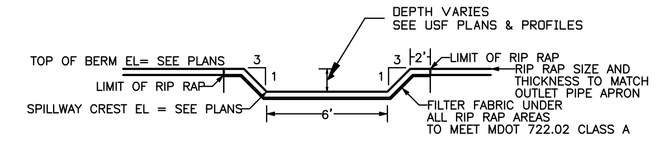

EMERGENCY SPILLWAY DETAIL

NOT TO SCALE

NOTE: RIP RAP APRON TO EXTEND FROM 12" BELOW CREST INSIDE OF BASIN ACROSS CREST AND DOWN THE BACKSLOPE TO MEET THE EXISTING GRADE

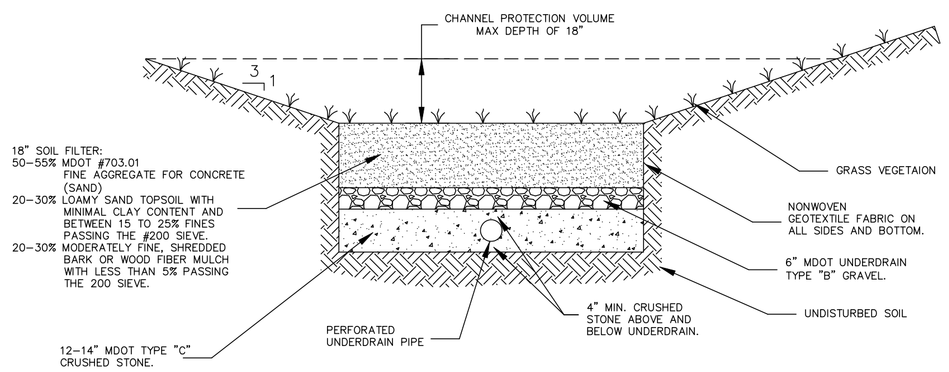

FILTER SWALE – CROSS SECTION

Not To Scale

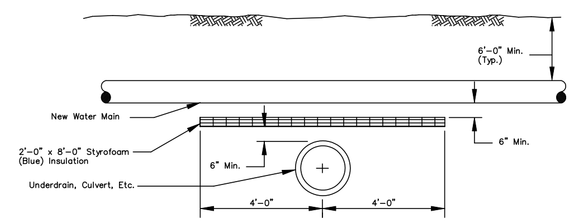

Insulation Detail "B"

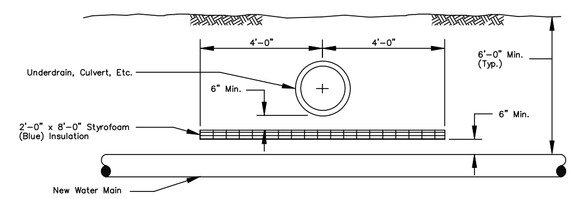

Insulation Detail "A"

Pipe Insulation Details

Not To Scale

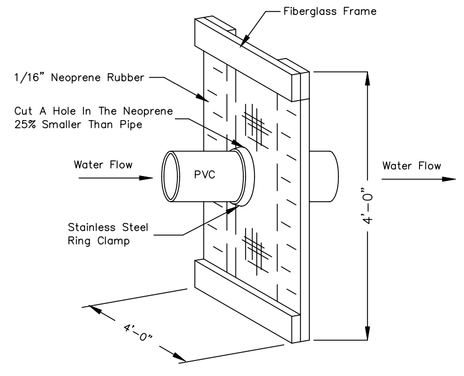

Anti-Seep Collar Detail

Not To Scale

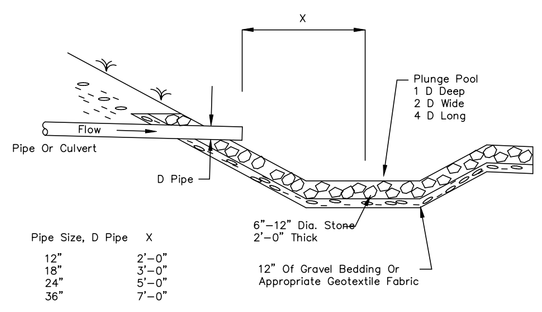

Pipe Size, D Pipe	X
12"	2'-0"
18"	3'-0"
24"	5'-0"
36"	7'-0"

Typical Plunge Pool Detail

Not To Scale

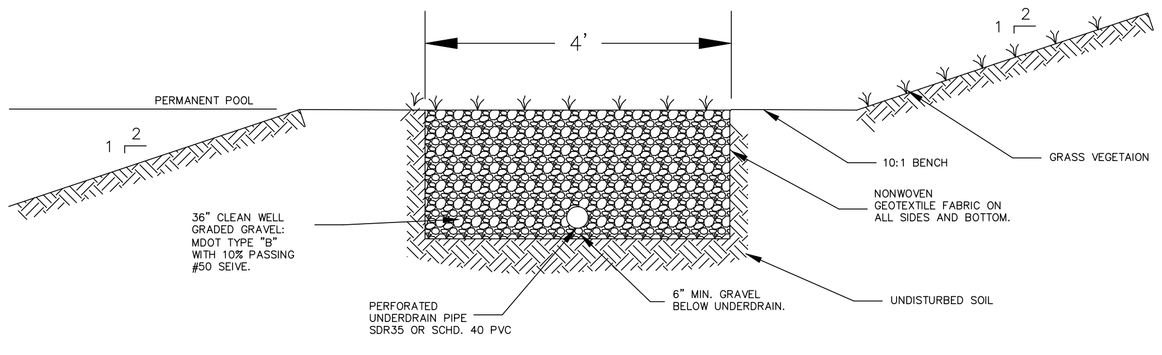

POND FILTER – CROSS SECTION

Not To Scale

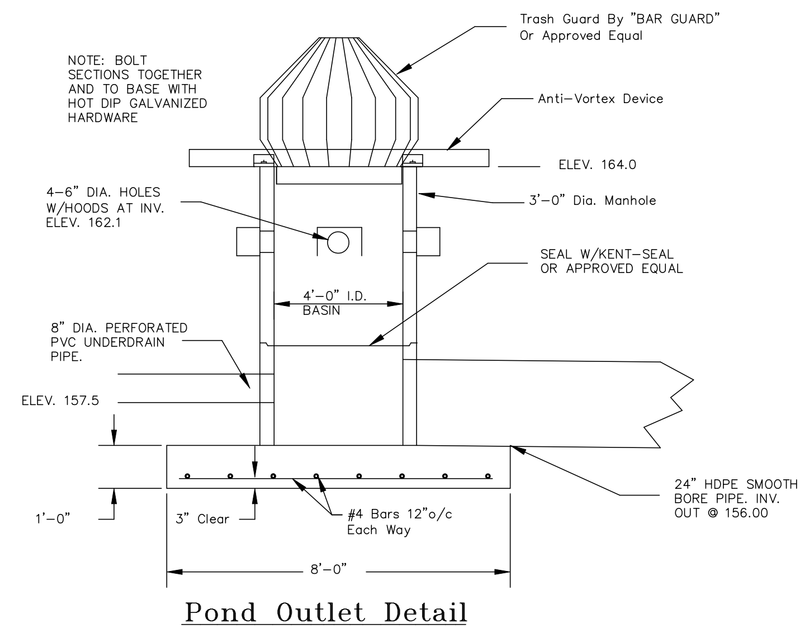

Pond Outlet Detail

Not To Scale

GRAPHIC SCALE

30 0 15 30 60 120

(IN FEET)
1 inch = 30 ft.

REVISIONS

NO.	DATE	DESCRIPTION	DRAWN	APPD.
1	11/17/22	GRADING & STORMWATER REVISION, DEP COMMENTS	AAK	SEB
2	11/16/23	RESPONSE TO CITY COMMENTS	SEB	SEB

PROJECT NAME:
THE MAINE WOODS SUBDIVISION
LANCASTER AVE., BANGOR, PENOBSCOT COUNTY MAINE

SHEET NAME:
STORM WATER DETAIL

PROJECT NO: 22083
DRAWING NO: 22083 BASE.DWG
FIELDBOOK: N/A
SCALE: AS SHOWN
DATE ISSUED: 11/7/23

DESIGNED: SEB
DRAWN: AAK
CHECKED: SEB
APPROVED: SEB
PLAN DATE: 11/7/23

CLIENT & OWNER:
TEAM PROPERTIES
1411 ESSEX ST.
BANGOR, ME 04401

Plymouth Engineering, Inc.
P.O. Box 46 30 Lower Detroit Road
Plymouth, Maine 04969
Tel: (207) 257-2071 Fax: (207) 257-2130
info@plymouthengineering.com
www.plymouthengineering.com

FOR PERMIT ONLY

STATE OF MAINE
SCOTT E. BRAUER
No. 6227
LICENSED
11/20/23
PROFESSIONAL ENGINEER

DRAWINGS NOT SEALED ARE FOR PLANNING PURPOSES ONLY AND ARE NOT INTENDED FOR PERMITTING, BIDDING OR CONSTRUCTION

Nov 21, 2023 - 10:00am
J:\2022\22083 - Team Properties The Maine Woods Subdivision - Bangor - Team Properties\J. Drawings\CIVIL\2023 permitting\111623 22083 base.dwg

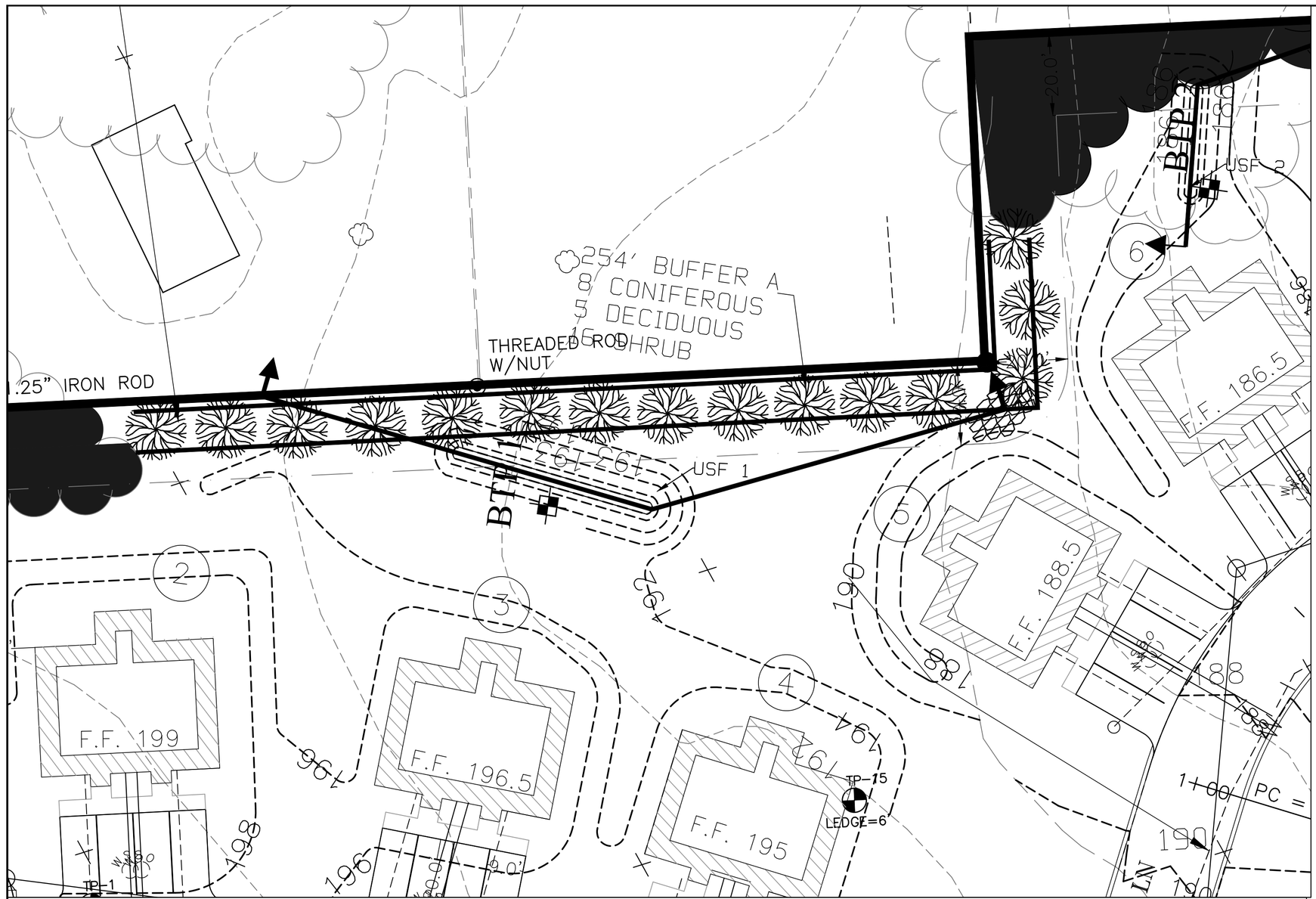

USF1

USF2

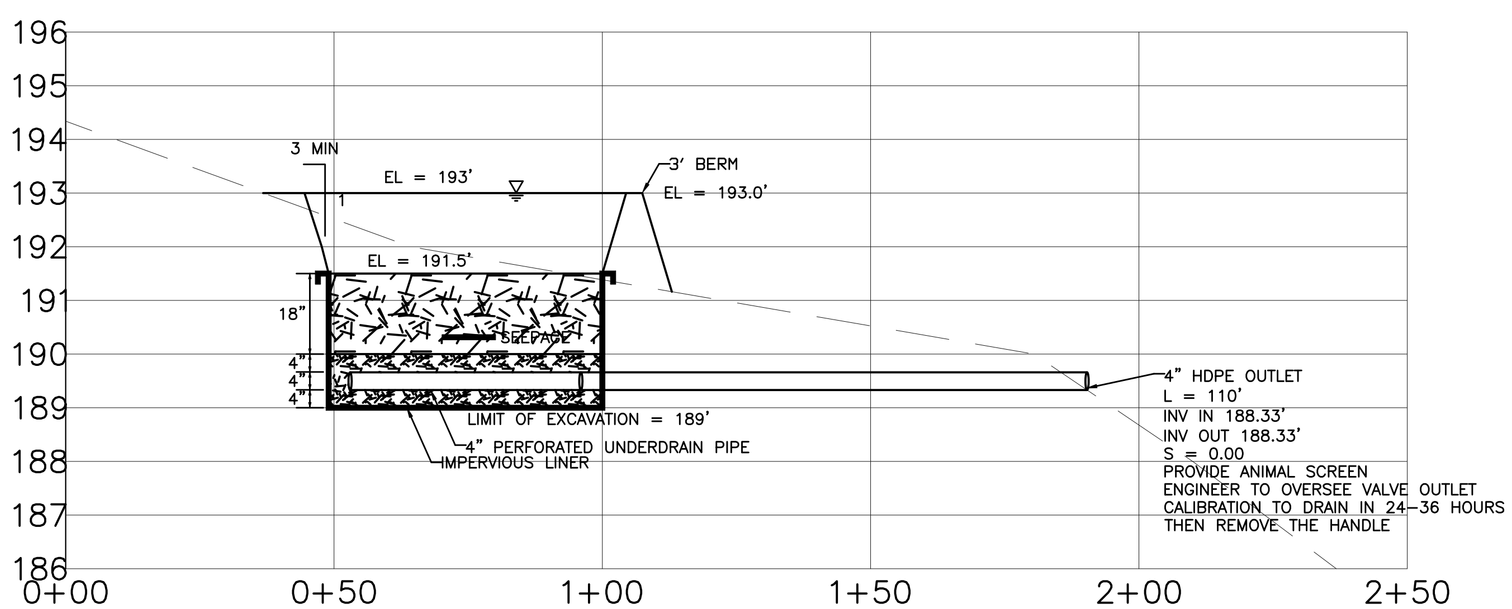

USF 1

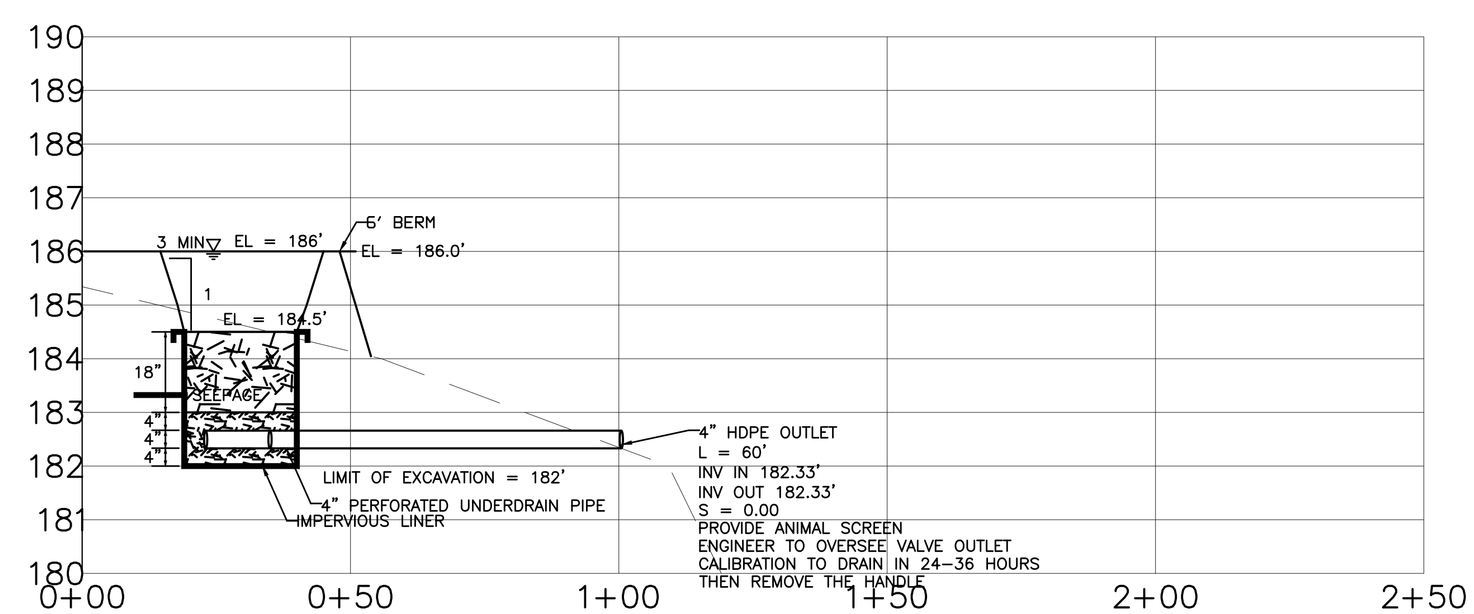

USF 2

GRAPHIC SCALE

(IN FEET)
1 inch = 20 ft.

REVISIONS

NO.	DATE	DESCRIPTION	DRAWN	APPD.
1	11/6/23	RESPONSE TO CITY COMMENTS	SEB	SEB
2	11/16/23	RESPONSE TO CITY COMMENTS	SEB	SEB

PROJECT NAME:
THE MAINE WOODS SUBDIVISION
LANCASTER AVE., BANGOR, PENOBSCOT COUNTY MAINE
SHEET NAME:
USF PLAN & PROFILE

PROJECT NO. 22083
DRAWING NO. 22083 BASE.DWG
FIELDBOOK: N/A
SCALE: AS SHOWN
DATE ISSUED: 11/7/23

DESIGNED: SEB
DRAWN: AAK
CHECKED: SEB
APPROVED: SEB
PLAN DATE: 11/7/23
CLIENT & OWNER:
TEAM PROPERTIES
141 ESSEX ST.
BANGOR, ME 04401

Plymouth Engineering, Inc.
P.O. Box 46 30 Lower Detroit Road
Plymouth, Maine 04969
Tel: (207) 257-2071 Fax: (207) 257-2130
info@plymouthengineering.com
www.plymouthengineering.com

STATE OF MAINE
SCOTT E. BRALEY
No. 6227
11/20/23
LICENSED
PROFESSIONAL ENGINEER

DRAWINGS NOT SEALED ARE FOR PLANNING PURPOSES ONLY AND ARE NOT INTENDED FOR PERMITTING, BIDDING OR CONSTRUCTION

SHEET 13 OF 17

C12

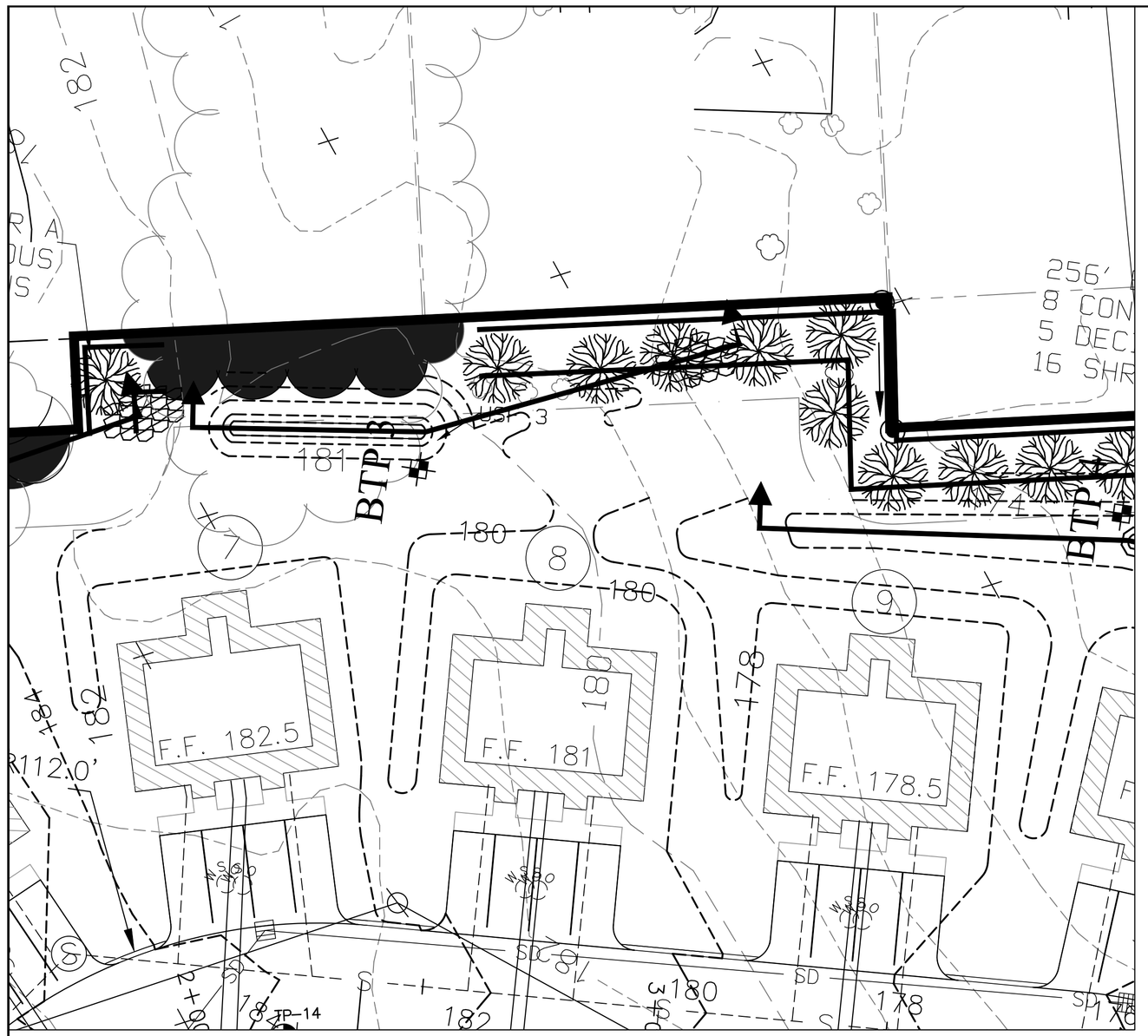

USF3

USF4

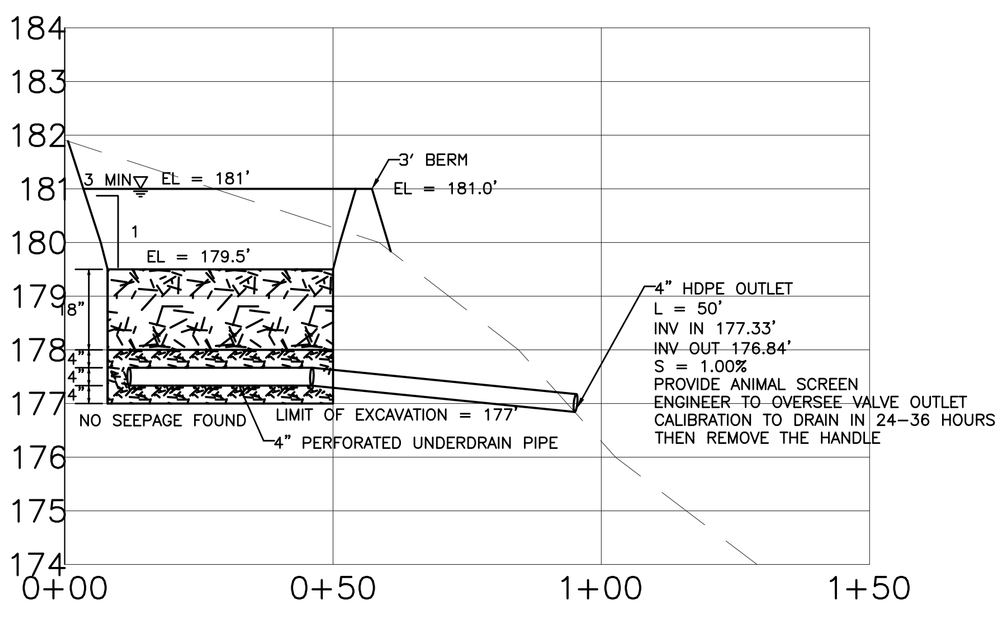

USF 3

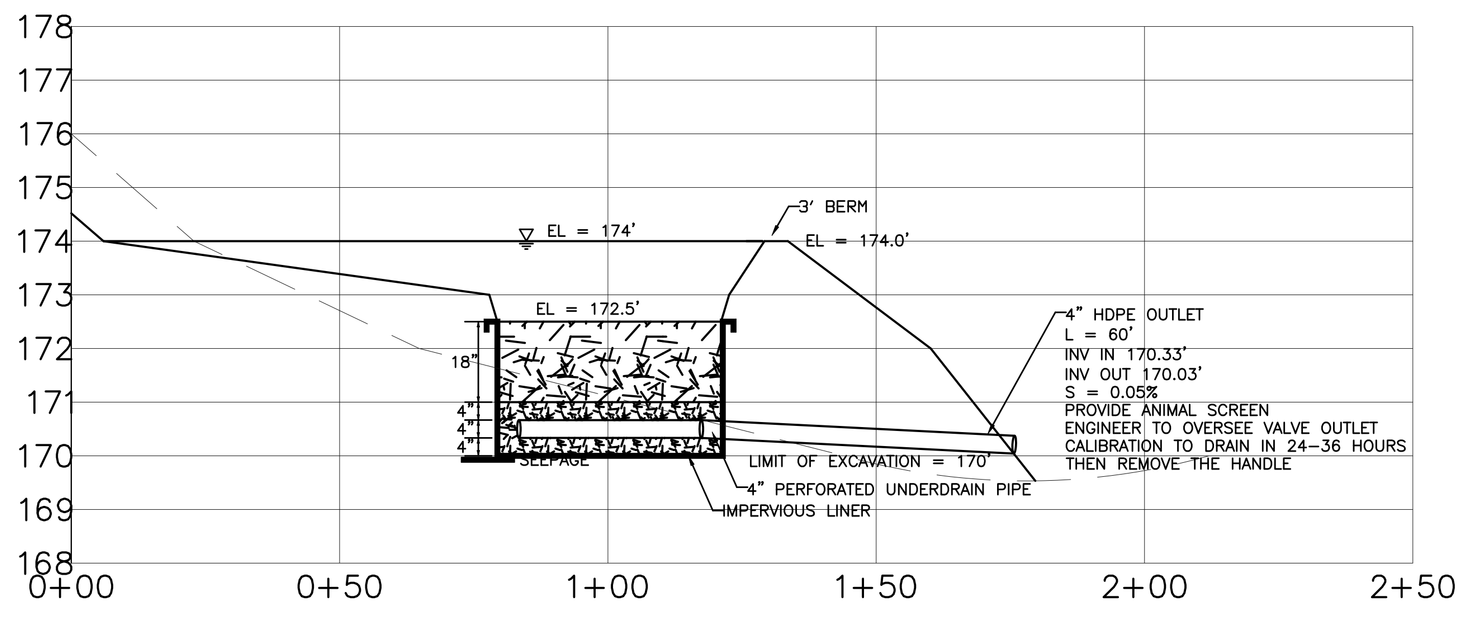

USF 4

GRAPHIC SCALE

20 0 10 20 40 80

(IN FEET)
1 inch = 20 ft.

REVISIONS

NO.	DATE	DESCRIPTION	DRAWN	APPD.
1	11/6/23	RESPONSE TO CITY COMMENTS	SEB	SEB
2	11/16/23	RESPONSE TO CITY COMMENTS	SEB	SEB

PROJECT NAME: THE MAINE WOODS SUBDIVISION
LANCASTER AVE., BANGOR, PENOBSCOT COUNTY MAINE

SHEET NAME: USF PLAN & PROFILE

PROJECT NO. 22083
DRAWING NO. 22083 BASE.DWG
FIELDBOOK: N/A
SCALE: AS SHOWN
DATE ISSUED: 11/7/23

DESIGNED: SEB
DRAWN: AAK
CHECKED: SEB
APPROVED: SEB
PLAN DATE: 11/7/23

CLIENT & OWNER:
TEAM PROPERTIES
141 ESSEX ST.
BANGOR, ME 04401

Plymouth Engineering, Inc.
P.O. Box 46 30 Lower Detroit Road
Plymouth, Maine 04969
Tel: (207) 257-2071 Fax: (207) 257-2130
info@plymouthengineering.com
www.plymouthengineering.com

STATE OF MAINE
SCOTT E. BRAGG
No. 6222
11/28/23
LICENSED
PROFESSIONAL ENGINEER

DRAWINGS NOT SEALED ARE FOR PLANNING PURPOSES ONLY AND ARE NOT INTENDED FOR PERMITTING, BIDDING OR CONSTRUCTION

SHEET 14 OF 17

C13

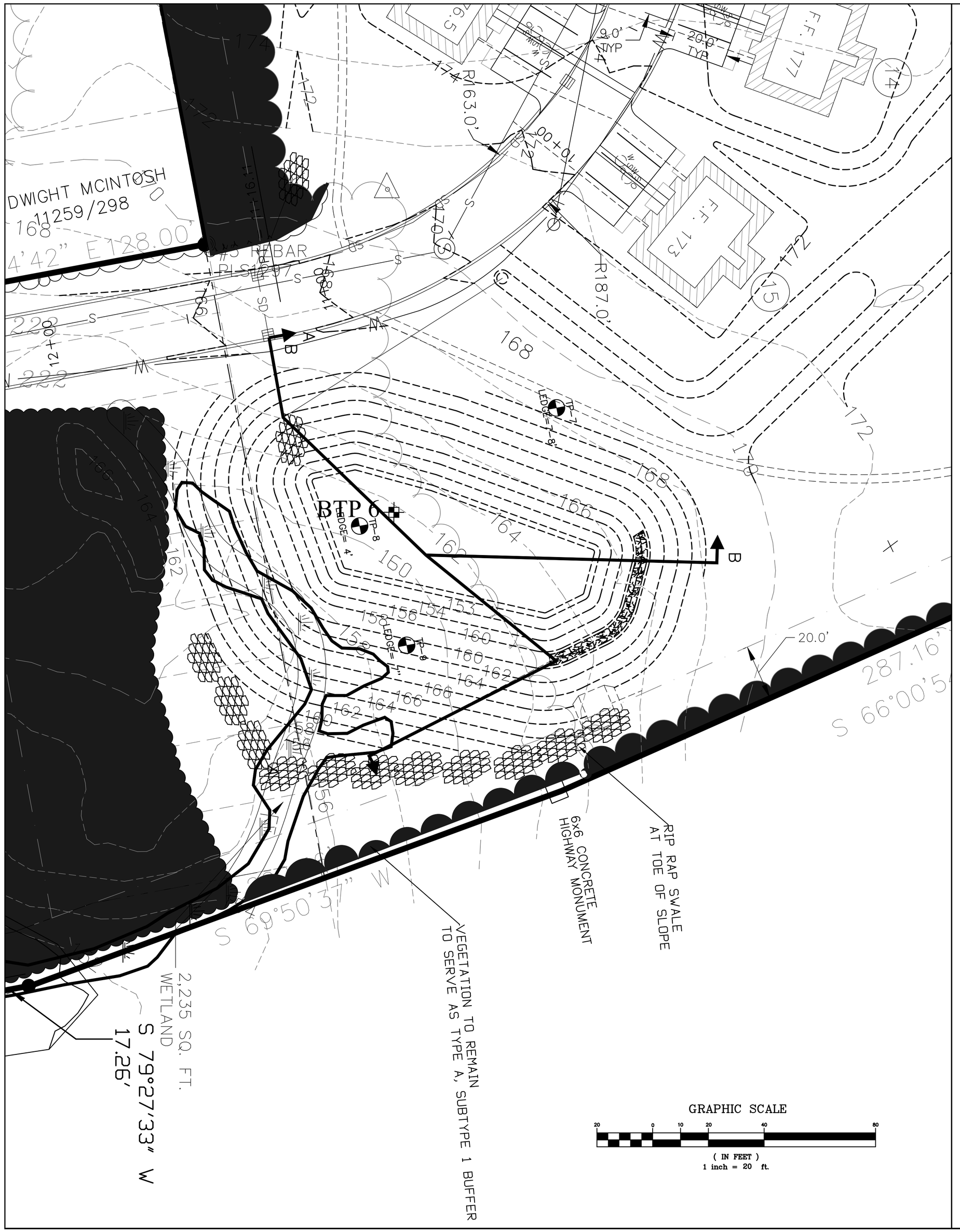

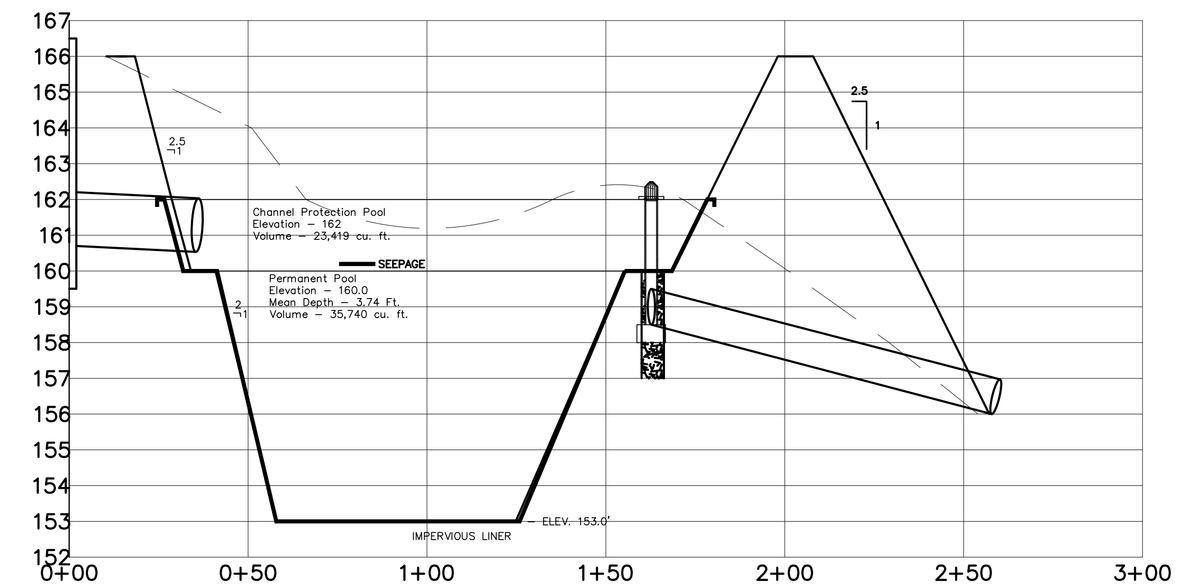

POND SECTION A–A

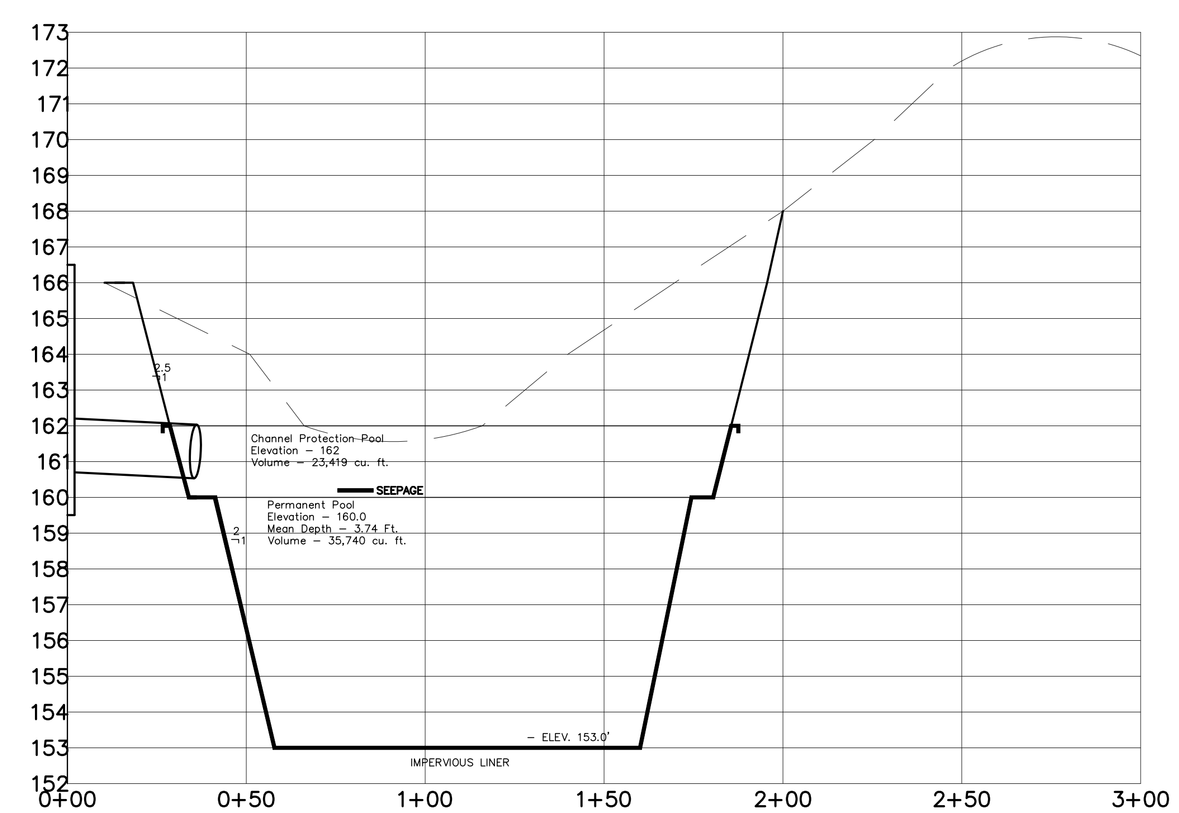

POND SECTION B–B

REVISIONS

NO.	DATE	DESCRIPTION	DRAWN	APPD.
1	11/8/23	RESPONSE TO CITY COMMENTS	SEB	SEB
2	11/16/23	RESPONSE TO CITY COMMENTS	SEB	SEB

PROJECT NAME:
THE MAINE WOODS SUBDIVISION
LANCASTER AVE., BANGOR, PENOBSCOT COUNTY MAINE
SHEET NAME:
POND PLAN & PROFILE

PROJECT NO. 22083
DRAWING NO. 22083 BASE.DWG
FIELDBOOK: N/A
SCALE: AS SHOWN
DATE ISSUED: 11/7/23

DESIGNED: SEB
DRAWN: AAK
CHECKED: SEB
APPROVED: SEB
PLAN DATE: 11/7/23

CLIENT & OWNER:
TEAM PROPERTIES
141 ESSEX ST
BANGOR, ME 04401

Plymouth Engineering, Inc.
P.O. Box 46 30 Lower Detroit Road
Plymouth, Maine 04969
Tel: (207) 257-2071 Fax: (207) 257-2130
info@plymouthengineering.com
www.plymouthengineering.com

STATE OF MAINE
SCOTT E. BRADY
No. 8229
LICENSED
PROFESSIONAL ENGINEER
11/20/23

DRAWINGS NOT SEALED ARE FOR PLANNING PURPOSES ONLY AND ARE NOT INTENDED FOR PERMITTING, BIDDING OR CONSTRUCTION

SHEET 15 OF 17

C14

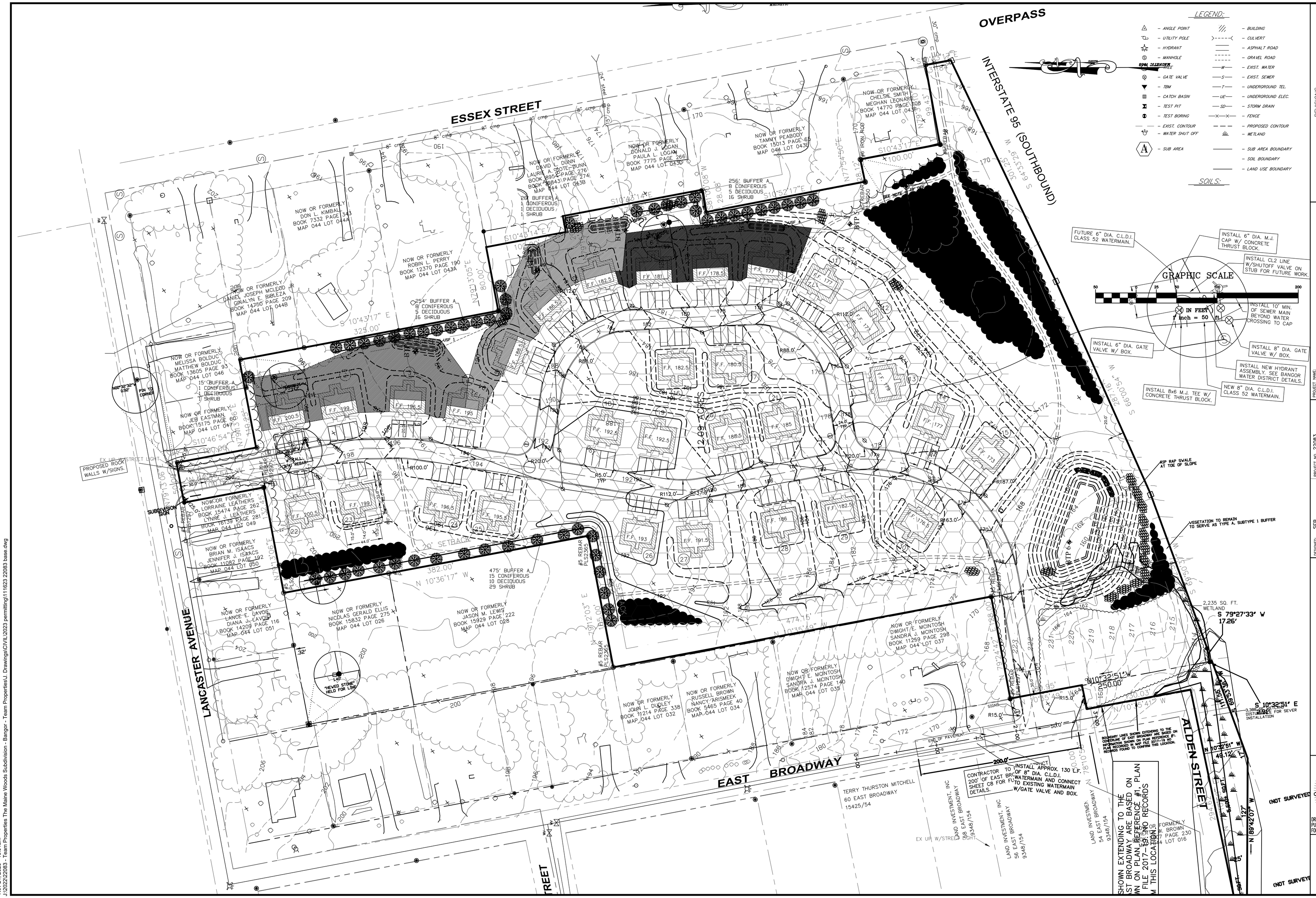

REVISIONS					
NO.	DATE	DESCRIPTION	DRAWN	APPD.	
1	11/8/23	RESPONSE TO CITY COMMENTS	SEB	SEB	
2	11/16/23	RESPONSE TO CITY COMMENTS	SEB	SEB	

PROJECT NAME:
THE MAINE WOODS SUBDIVISION
LANCASTER AVE., BANGOR, PENOBSCOT COUNTY MAINE

SHEET NAME:
POST DEVELOPMENT

Plymouth Engineering, Inc.
P.O. Box 46 30 Lower Detroit Road
Plymouth, Maine 04969
Tel: (207) 257-2071 Fax: (207) 257-2130
info@plymouthengineering.com
www.plymouthengineering.com

DESIGNED:	SEB
DRAWN:	AAK
CHECKED:	SEB
APPROVED:	SEB
PLAN DATE:	11/7/23
CLIENT & OWNER:	TEAM PROPERTIES 1144 EST BROADWAY BANGOR, ME 04401

PROJECT NO.	22083
DRAWING NO.	22083 BASE.DWG
FIELDBOOK:	N/A
SCALE:	AS SHOWN
DATE ISSUED:	11/7/23

FOR REVIEW
STATE OF MAINE
SCOTT E. BRAGG No. 6027 LICENSED PROFESSIONAL ENGINEER
11/07/2023
DRAWINGS NOT SEALED ARE FOR PLANNING PURPOSES ONLY AND ARE NOT INTENDED FOR PERMITTING, BIDDING OR CONSTRUCTION

SHEET 16 OF 17

D1

Nov 21, 2023 - 10:01am
J:\2022\22083 - Team Properties The Maine Woods Subdivision - Bangor - Team Properties\J. Drawings\CIVIL\2023 permitting\11\23 22083 base.dwg

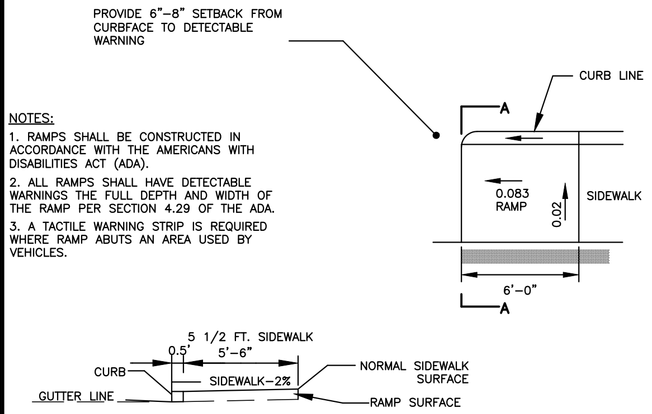

NOTES:

1. RAMPS SHALL BE CONSTRUCTED IN ACCORDANCE WITH THE AMERICANS WITH DISABILITIES ACT (ADA).
2. ALL RAMPS SHALL HAVE DETECTABLE WARNINGS THE FULL DEPTH AND WIDTH OF THE RAMP PER SECTION 4.29 OF THE ADA.
3. A TACTILE WARNING STRIP IS REQUIRED WHERE RAMP ABUTS AN AREA USED BY VEHICLES.

HANDICAP RAMP

NOT TO SCALE

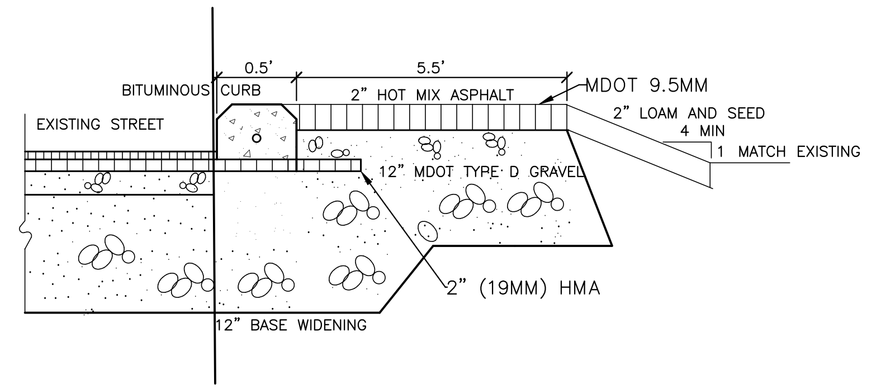

CURB/ WALK SECTION

NO SCALE

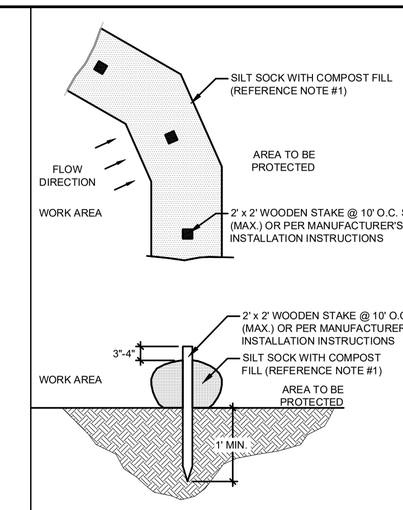

NOTE

1. REFERENCE PLAN AND/OR TECHNICAL SPECIFICATIONS FOR SILT SOCK SIZE, FILL MATERIAL AND APPROVED MANUFACTURERS.
2. THE SILT SOCK SHALL BE PLACED AT LOCATIONS INDICATED ON PLANS AND SHOULD BE INSTALLED PARALLEL TO THE BASE OF THE SLOPE OR OTHER AFFECTED AREA.
3. CONTRACTOR IS RESPONSIBLE FOR ESTABLISHING A WORKING EROSION CONTROL SYSTEM AND MAY, WITH APPROVAL OF THE OWNER'S REPRESENTATIVE, WORK OUTSIDE THE MINIMUM CONSTRUCTION REQUIREMENTS AS NEEDED.
4. THE CONTRACTOR SHALL MAINTAIN THE SILT SOCK IN A FUNCTIONAL CONDITION AT ALL TIMES AND IT SHALL BE ROUTINELY INSPECTED. REPAIR OR REPLACEMENT SHALL BE MADE PROMPTLY AS NEEDED.
5. THE CONTRACTOR SHALL REMOVE SEDIMENTS COLLECTED AT THE BASE OF THE SILT SOCK WHEN THEY REACH 1/3 OF THE EXPOSED HEIGHT OF THE DEVICE OR AS DIRECTED BY THE OWNER'S REPRESENTATIVE. SEDIMENT TRAPPED BY THIS PRACTICE SHALL BE DISPOSED OF IN AN APPROVED SITE IN A MANNER THAT WILL NOT CONTRIBUTE TO ADDITIONAL SILTATION.
6. THE COMPOST FILL WILL BE DISPERSED ON SITE WHEN NO LONGER REQUIRED, AS DETERMINED BY THE OWNER'S REPRESENTATIVE.

SEDIMENT BARRIER– SILT SOCK

NOT TO SCALE

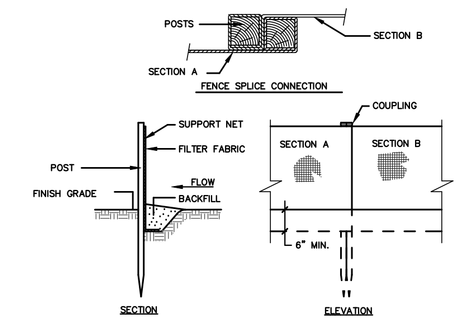

SEDIMENT BARRIER– SILT FENCE

NOT TO SCALE

NOTE

1. IF EXTRA STRENGTH FABRIC IS USED WIRE MESH MAY BE OMITTED, PROVIDING POST SPACING DOES NOT EXCEED 6' O.C.
2. INSTALL SEDIMENT BARRIER ALONG THE CONTOURS WITH THE ENDS TURNED UP-SLOPE. IN AREAS WHERE SEDIMENT BARRIER IS USED AS LIMIT OF DISTURBANCE, REMOVE IMMEDIATELY FOLLOWING STABILIZATION.
3. IN ANY AREA WHERE SEDIMENT BARRIERS ARE SHOWN DOWN GRADIENT OF A STORMWATER CONVEYANCE OR STRUCTURE, THAT BARRIER SHALL BE REMOVED UPON COMPLETION AND STABILIZATION OF THE STRUCTURE.
4. REMOVE SEDIMENT ACCUMULATION ONCE IT REACHES 1/2 OF STRUCTURE HEIGHT.

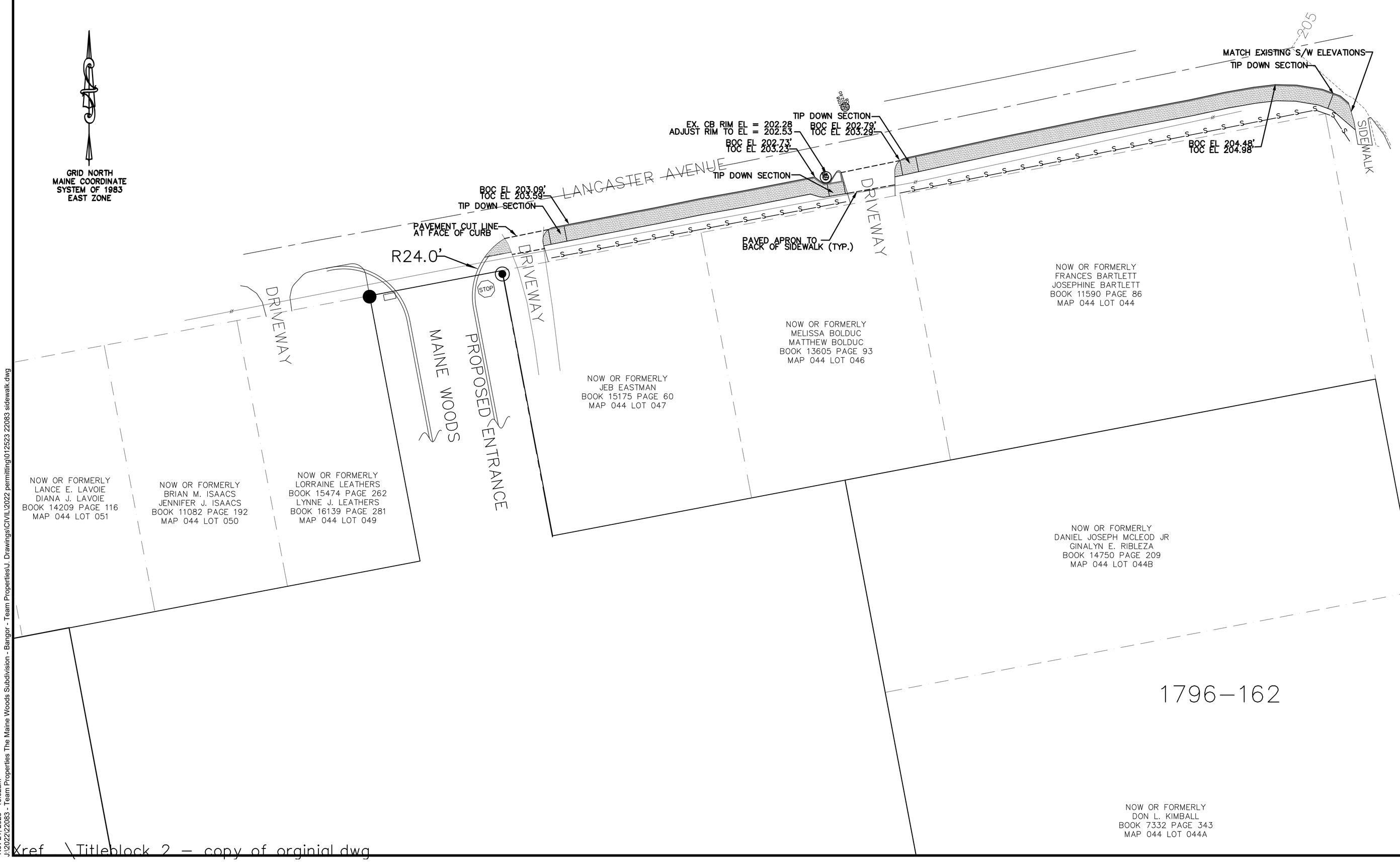

GENERAL NOTES:

1. BOUNDARY SURVEY PROVIDED BY PERRY LAND SURVEYORS OF ETNA, MAINE.

2. THE LOCATION SHOWN ON THIS PLAN OF ABOVE GROUND AND UNDERGROUND UTILITIES INCLUDING ELECTRICITY, WATER, TELEPHONE, COMMUNICATION, AND STORMWATER ARE APPROXIMATE AND SHOULD BE FIELD VERIFIED PRIOR TO ANY WORK.

3. FEDERAL, STATE, AND MUNICIPAL LAWS AND REGULATIONS REQUIRE ANYONE PERFORMING ANY SORT OF EXCAVATION, INCLUDING DIGGING, BORING, BACKFILLING, OR ROUGH GRADING TO NOTIFY "DIG-SAFE" (1-800-344-7233) AND ANY APPLICABLE UTILITY THAT IS NOT A PARTICIPANT IN "DIG-SAFE", AT LEAST 72 HOURS PRIOR TO COMMENCING WORK.

SURVEYORS NOTES

GENERAL NOTES

1. THIS STANDARD BOUNDARY SURVEY CONFORMS TO STANDARDS SET FORTH BY THE BOARD OF LICENSURE FOR PROFESSIONAL LAND SURVEYORS, CATEGORY I, CONDITION III, WITH THE FOLLOWING EXCEPTION(s):

a) NO WRITTEN REPORT PREPARED.
b) ALL ANGLE POINTS NOT MONUMENTED.
c) DESCRIPTION NOT PREPARED/UPDATED.
d) NOW WORK TO EXTEND BEYOND P.O.W. LIMIT

LEGEND

—— — ——	ROAD CENTERLINE
------124------	EXISTING MINOR CONTOUR
------124------	EXISTING MAJOR CONTOUR
————	EXISTING EDGE OF PAVEMENT
— — — —	EXISTING PROPERTY LINE
▬▬▬	PROPOSED CURB
⊖	EXISTING UTILITY POLE
◎	EXISTING CATCH BASIN
■	PROPOSED PAVED SIDEWALK
—S—S—S—	PROPOSED EROSION BARRIER

GRAPHIC SCALE

20 0 10 20 40 80

(IN FEET)
1 inch = 20 ft.

NO.	DATE	DESCRIPTION	DRAWN	APPD.
1	11/8/23	RESPONSE TO CITY COMMENTS	SEB	SEB
2	11/16/23	RESPONSE TO CITY COMMENTS	SEB	SEB

REVISIONS

PROJECT NAME: THE MAINE WOODS SUBDIVISION
LANCASTER AVE., BANGOR, PENOBSCOT COUNTY MAINE
SHEET NAME: SIDEWALK PLAN

PROJECT NO: 22083
DRAWING NO: 22083 BASE.DWG
FIELDBOOK: N/A
SCALE: AS SHOWN
DATE ISSUED: 11/7/23

DESIGNED: SEB
DRAWN: AAK
CHECKED: SEB
APPROVED: SEB
PLAN DATE: 11/7/23
CLIENT & OWNER: TEAM PROPERTIES 144 HOGAN RD. BANGOR, ME 04401

Plymouth Engineering, Inc.
P.O. Box 46 30 Lower Detroit Road
Plymouth, Maine 04969
Tel: (207) 257-2071 Fax: (207) 257-2130
info@plymouthengineering.com
www.plymouthengineering.com

STATE OF MAINE SCOTT E. BRAGG NO. 5158 LICENSED PROFESSIONAL ENGINEER 10/26/23

DRAWINGS NOT SEALED ARE FOR PLANNING PURPOSES ONLY AND ARE NOT INTENDED FOR PERMITTING, BIDDING OR CONSTRUCTION

SHEET 17 OF 17

C15

Nov 21, 2023 - 10:02am
J:\2022\22083 - Team Properties The Maine Woods Subdivision - Bangor - Team Properties\J. Drawings\CIVIL\2022 permitting\012523 22083 sidewalk.dwg

Xref \Titleblock 2 – copy of orginial.dwg